ENVE 301
Environmental Engineering Unit Operations

CHAPTER: 10
Sedimentation

Assist. Prof. Bilge Alpaslan Kocamemi
Marmara University
Department of Environmental Engineering
Istanbul, Turkey

Sedimentation

seperation of unstable and destabilized suspended solids from a suspension by the force of gravity

Applications in Water Treatment:

1. settling of coagulated and flocculated waters prior to filtration
2. settling of coagulated and flocculated waters in a softening plant
3. settling of treated waters in an iron and manganese removal plant

Applications in Wastewater Treatment:

1. grit removal
2. suspended solids removal in primary clarifier
3. biological floc removal in activated sludge

Sedimentation

Settling of particles from suspension depends on:

Characteristics of the Particles

DISCRETE PARTICLES

particles whose size, shape and specific gravity do not change with time.

FLOCCULATING PARTICLES

particles whose surface properties are such that they aggregate upon contact
Thus, changing in size, shape, and perhaps specific gravity with each contact

Concentration of Particles in Suspension

DILUTE SUSPENSIONS

suspensions in which the conc. of particles is not sufficient to cause significant displacement of water as they settle or in which the particles will not be close enough for velocity field interference to occur

CONCENTRATED SUSPENSIONS

suspensions in which the conc. of particles is too great to meet the conditions mentioned for dilute suspensions

TYPE 1 **(discrete particle settling)**	• settling of discrete particles in dilute suspensions • particles have no tendency to flocculate • they settle as individual entities and there is no significant interaction with neighboring particles	**Example:** removal of grit and sand in wastewater treatment
TYPE 2 **(flocculant settling)**	• settling of flocculant particles in dilute suspensions • as particle settle and coalesce with other particles, the sizes of particles and their settling velocity increases	**Examples:** • removal of SS in primary sedimentation tanks of WWTP • settling of chemically coagulated waters
TYPE 3 **(hindered settling)** **or** **(zone settling)**	• settling of intermediate concentration of flocculant particles • particles are so close together that interparticle forces are able to hold them in fixed positions relative to each other and the mass of particles settles as a zone at a constant velocity	**Example:** biological floc removal in secondary settling basins of WWTP
TYPE 4 **(compression settling)**	• settling of particles that are of such a high concentration that the particles touch each other and settling can occur only by compression which takes place from the weight of particles	**Examples:** • occurs in the bottom of deep secondary clarifiers • in sludge thickening facilities

Type 1 – Discrete Settling

If a particle is suspended in water , it initially has 2 forces acting upon it.

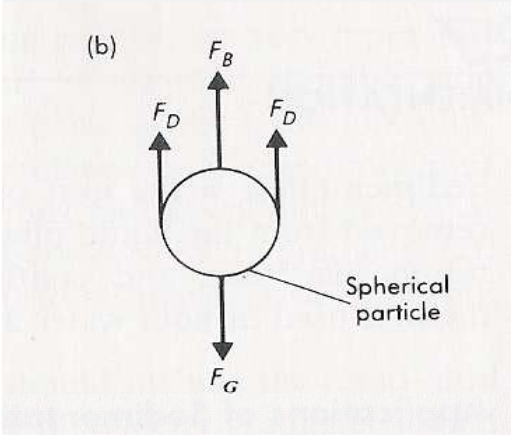

1. The forces of gravity $\boxed{f_g = \rho_p g \forall_p}$

2. The buoyant force quantified by Archimedes. $\boxed{f_b = \rho_w g \forall_p}$

ρ_p = density of particle

$\forall_p$ = volume of particle

ρ_w = density of water

$\forall_p$ = volume of particle

C_D = drag coeff.

A_p = cross sectional area of particle perpendicu lar to the direction of movement

ρ_w = density of water

υ_s =settling velocity of particle

Once motion has been initiated, a third force is created due to viscous friction

1. Drag force $\boxed{f_D = C_D A_p \rho_w \frac{\upsilon_s^2}{2}}$

Force balance for a discrete particle that is settling

$$\boxed{m_p \underbrace{\frac{d\vartheta_s}{dt}}_{\text{Downward acceleration of particle}} = F_G - F_B - F_D}$$

After an initial transient period, the acceleration $\frac{d\upsilon_s}{dt}$ becomes zero and the settling velocity becomes constant.

$$m_p \frac{d\vartheta_s}{dt} = 0 = F_G - F_B - F_D$$

$$0 = (\rho_p g \forall_p) - (\rho_w g \forall_p) - \left(C_D A_p \rho_w \frac{\vartheta_s^2}{2} \right)$$

$$0 = g\forall_p(\rho_p - \rho_w) - \left(C_D A_p \rho_w \frac{\vartheta_s^2}{2}\right)$$

$$g\forall_p(\rho_p - \rho_w) = \left(C_D A_p \rho_w \frac{\vartheta_s^2}{2}\right)$$

$$\boxed{\vartheta_s = \sqrt{\frac{2g(\rho_p - \rho_w)}{C_D \rho_w}\frac{\forall_p}{A_p}}}$$

SETTLING VELOCITY OF DISCRETE PARTICLE IN ANY SHAPE

(Eqn. 1)

For spherical particle;

$$\left.\begin{aligned} \forall_p &= \frac{4}{3}\pi r^3 \\ A &= \pi r^2 \end{aligned}\right\} \quad \frac{\forall_p}{A_p} = \frac{\frac{4}{3}\pi r^3}{\pi r^2} = \frac{4}{3}r$$

$$= \frac{4}{3}\frac{d}{2} \longrightarrow$$

Subsitute into Eqn.1

$$\vartheta_s = \sqrt{\frac{2g(\rho_p - \rho_w)}{C_D \rho_w} \frac{4}{3} \frac{d}{2}}$$

$$\boxed{\vartheta_s = \sqrt{\frac{4}{3} \frac{(\rho_p - \rho_w) g d}{C_D \rho_w}}}$$

SETTLING VELOCITY OF SPHERICAL DICRETE PARTICLE

(Eqn 2)

Newton's drag coefficient (C_D) is a function of:

- Flow regime around the particle
- Particle shape

$$\begin{cases} R_e < 1 \\ 1 < R_e < 10^4 \\ R_e > 10^4 \\ R_e = \dfrac{\vartheta_s D}{\nu} \qquad \nu = \dfrac{\mu}{\rho_w} \text{(kinetic visc.)} \\ R_e = \dfrac{\phi \vartheta_s D}{\nu} \text{ (for nonspheric al particles)} \end{cases}$$

Drag coefficient (C_o) for spheres:

$$C_D = \frac{24}{R_e} + \frac{3}{\sqrt{R_e}} + 0.34$$

For laminar flow → $R_e < 1$

negligible

$$C_D = \frac{24}{R_e} + \cancel{\frac{3}{\sqrt{R_e}}} + \cancel{0.34}$$

$$C_D = \frac{24}{R_e}$$

where $R_e = \frac{\vartheta_s d}{\nu} = \frac{\vartheta_s d \rho}{\mu}$

$$C_D = \frac{24\mu}{\vartheta_s d \rho_w}$$ For laminar flow

$$\boxed{\vartheta_s = \frac{g}{18\mu}\left(\rho_p - \rho_w\right)d^2}$$

Settling velocity of spherical discrete particles under laminar flow conditions (STOKE'S LAW) (Eqn. 3)

For turbulent flow → $R_e > 10^4$

$C_D = 0.34 - 0.4$ commonly used

Substitute into Eqn.2

$$\vartheta_s = \sqrt{\frac{10}{3} g \frac{(\rho_p - \rho_w) d}{\rho_w}}$$

Settling velocity of spherical discrete particles under turbulent flow conditions

Example 1: Find the terminal settling velocity of a spherical discrete particle with diameter 0,5 mm and specific gravity of 2.65 settling through water at 20^0C

$$\rho_w = 998.2 kg/m^3$$

$$\mu = 1.002.10^{-3} Ns/m^2$$

Critical Settling Velocity & Overflowrate

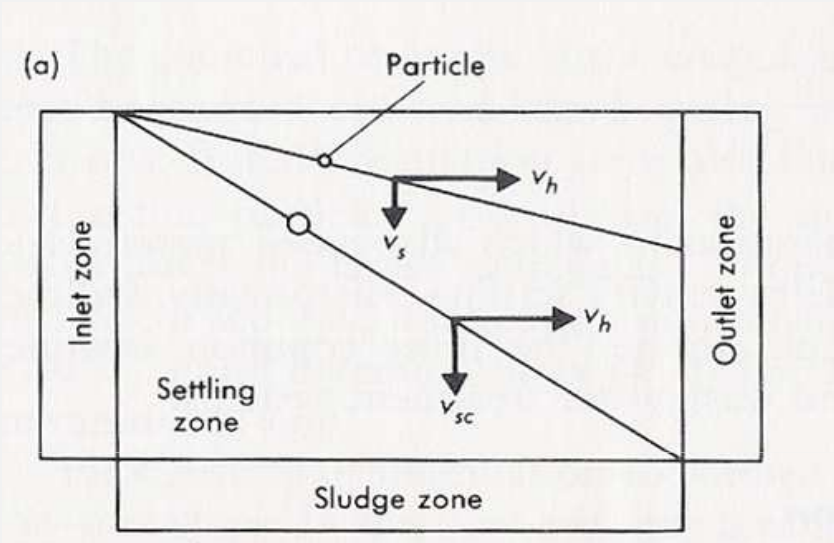

→ Particles move horizontally with the fluid (all particles have the same horizontal velocity)

→ Particles move vertically with terminal settling velocity
(different for particles with different size, shape and density)

All particles with $V_S > V_C$ → will be completely settled.

Particle with $V_s < V_c$ → will be removed in the ratio V_p / V_c

$$V_c = \text{critical velocity} = \frac{\text{tank depth}}{\text{detention time}} = \frac{\text{depth}}{\text{tank volume / flowrate}}$$

$$= \frac{\text{depth}}{(\text{depth . area})/\text{flowrate}}$$

$$= \frac{\text{flowrate}}{\text{area}} = \frac{Q}{A}$$

SURFACE LOADING
or
OVERFLOW RATE

(Settling velocity of the slowest-settling particles that are 100% removed)

In a typical suspension of discrete particles → a large variation in particle size

To determine the overall removal for
a given design settling velocity (or overflowrate)→ the settling velocity distribution for the suspension must be determined

<u>Experimental analysis</u>

use of a settling column

use of sieve analysis and hydrometer tests.

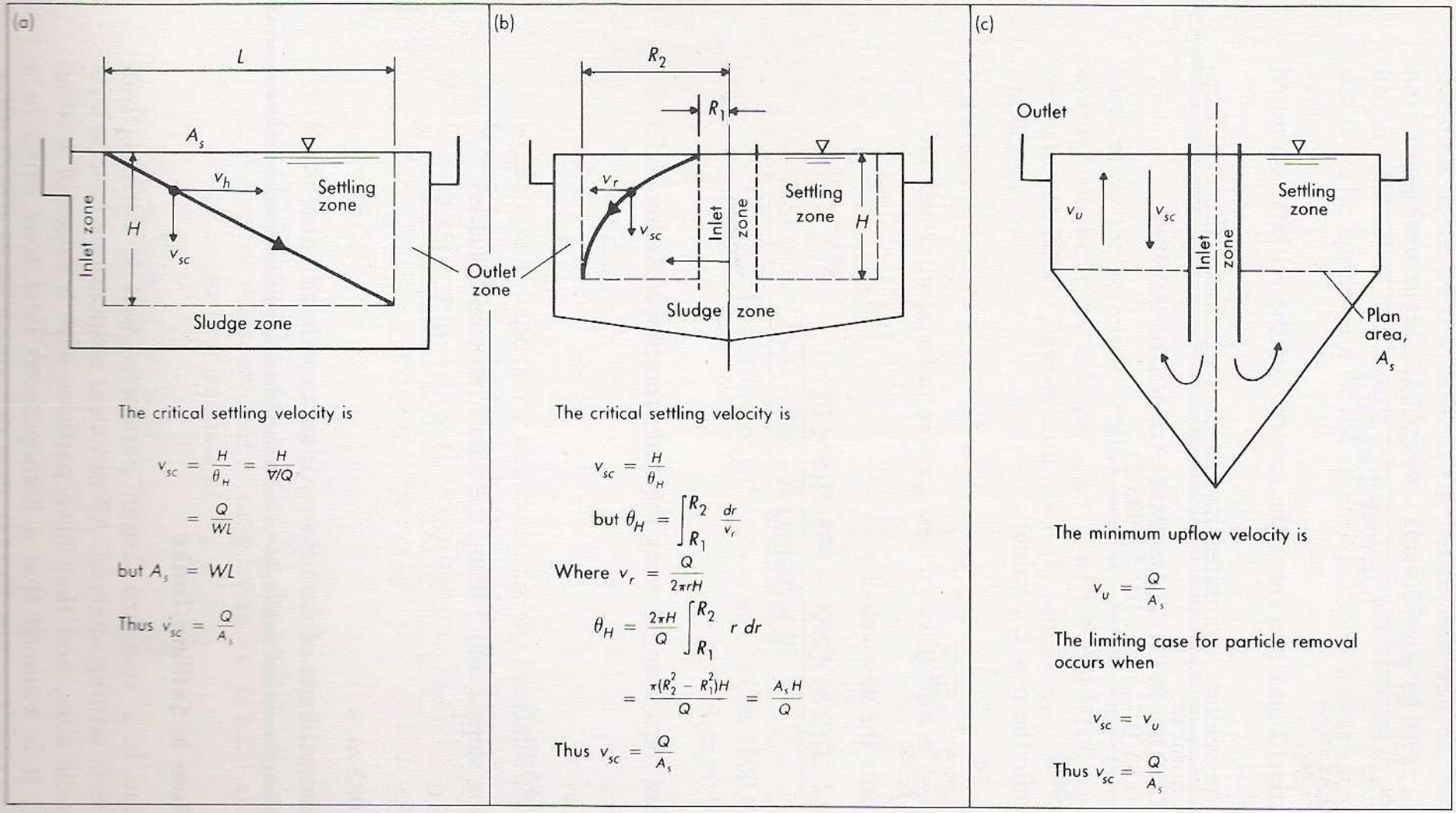

The critical settling velocity is

$$v_{sc} = \frac{H}{\theta_H} = \frac{H}{V/Q}$$

$$= \frac{Q}{WL}$$

but $A_s = WL$

Thus $v_{sc} = \frac{Q}{A_s}$

The critical settling velocity is

$$v_{sc} = \frac{H}{\theta_H}$$

but $\theta_H = \int_{R_1}^{R_2} \frac{dr}{v_r}$

Where $v_r = \frac{Q}{2\pi r H}$

$$\theta_H = \frac{2\pi H}{Q} \int_{R_1}^{R_2} r\, dr$$

$$= \frac{\pi(R_2^2 - R_1^2)H}{Q} = \frac{A_s H}{Q}$$

Thus $v_{sc} = \frac{Q}{A_s}$

The minimum upflow velocity is

$$v_u = \frac{Q}{A_s}$$

The limiting case for particle removal occurs when

$$v_{sc} = v_u$$

Thus $v_{sc} = \frac{Q}{A_s}$

FIGURE 12.16

Definition sketch for idealized settling in (a) a rectangular horizontal-flow, (b) a circular radial-flow, and (c) an upflow sedimentation tank. Source: Adapted from Ref. [12.4].

Batch Settling Column Test for Type 1 Settling

Depth of column → is not a factor in the analysis (about 2 m)

Diameter of column → about 200 mm

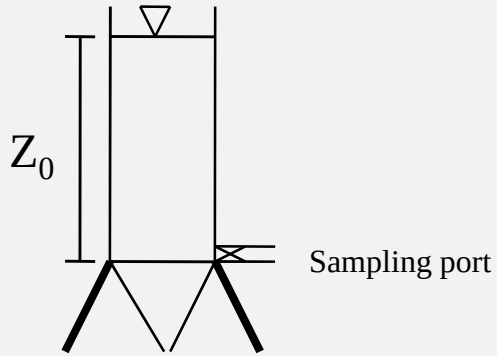

Procedure:

1. Height of the port is measured

2. Suspension to be tested is placed in the column
   Mixed completely to ensure uniform distribution of particles

3. At time=0, a portion of the sample is removed from the port
   TSS analysis is carried out in order to determine the initial TSS concentration

4. The suspension is allowed to settle

5. Intermittent samples are removed at appropriate time intervals
   For each sample withdrawn,
   TSS analysis must be performed in order to determine the fraction remaining in suspension at each time interval

6. Settling velocity at each time interval (V'=H/t'; V''=H/t''; V'''=H /t'''....)

   fraction with settling velocity less than stated vs terminal setling velocity

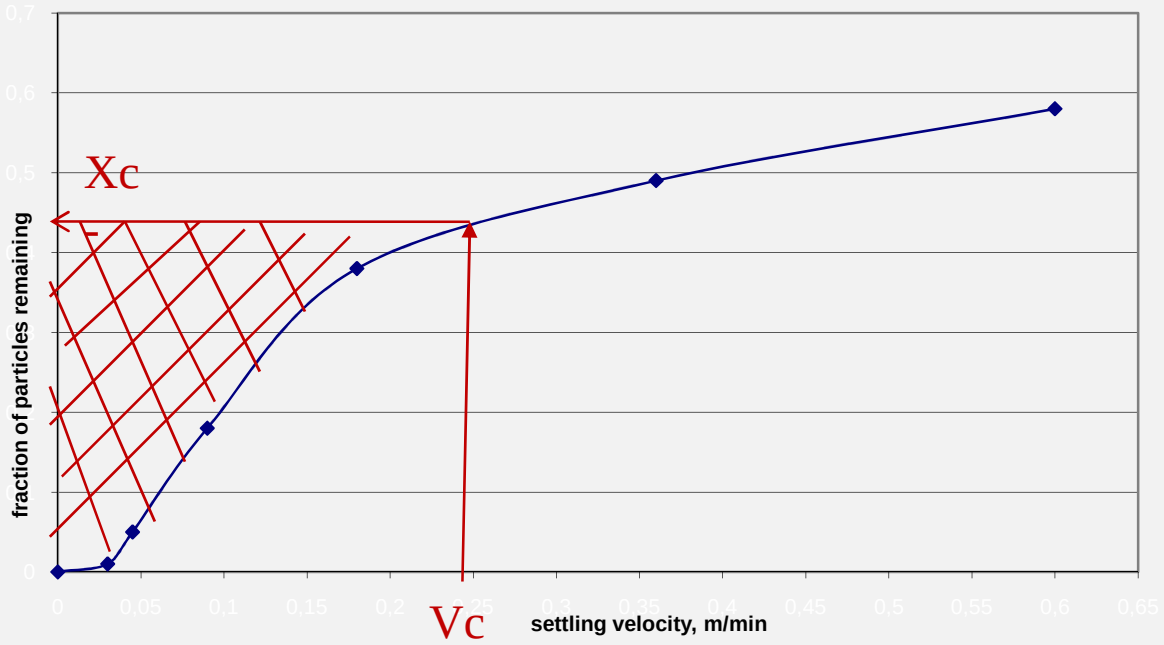

$$\text{Fraction removed} = \underbrace{(1 - X_C)}_{\text{Fraction particles with velocity greater than Vc}} + \underbrace{\int \frac{V_P}{V_C}\, dx}_{\text{Fraction particles with removed with velocity less than Vc}}$$

Sieve Analysis for Type 1 Settling

1. Particle Size vs Weight fraction greater than size (%) are determined

2. Settling velocity for each particle size is calculated

3. Cumulative distribution curve (fraction with settling velocity less than stated vs terminal setling velocity) is drawn

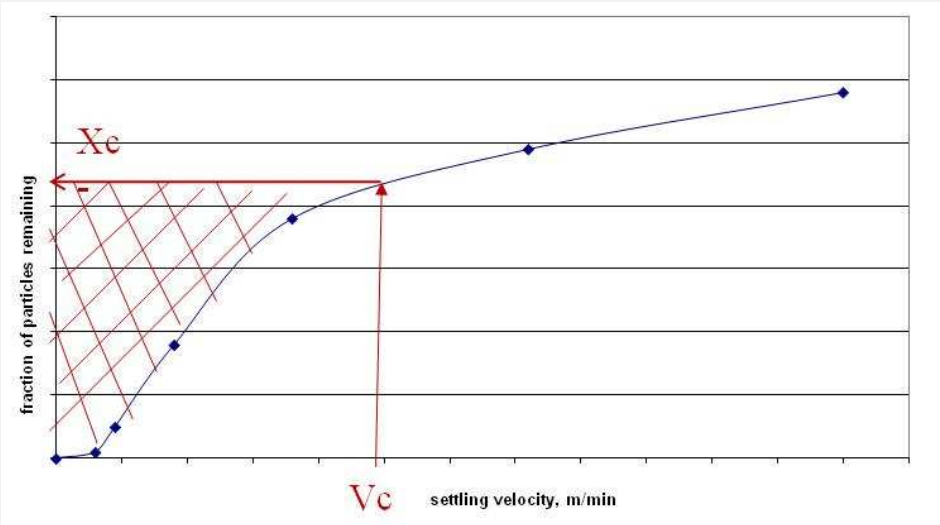

$$\text{Fraction removed} = \underbrace{(1 - X_C)}_{\text{Fraction particles with velocity greater than Vc}} + \underbrace{\int \frac{V_P}{V_C}\, dx}_{\text{Fraction particles with removed with velocity less than Vc}}$$

Type 2 – Flocculent Settling
(settling of flocculent particles in dilute suspension)

Chemical precipitates formed in coagulation and other destabilization processes → tend to agglomerate while settling as a result of interparticle collisions

As a result;

→ their sizes change continually (increases)

→ their shapes change continually

→ their specific gravity change

(as a result of entrapment of water in interstitial spaces)

Example 2:

Particle Type	Weight Fraction W_i	Settling Velocity, V_i
1	0.1	0.2 m/sec
2	0.3	0.1 m/sec
3	0.2	0.3 m/sec
4	0.4	0.15 m/sec

If V_c=0.16 m/sec for a given settling tank, what is the % of all solids removed?

Example 3: A settling analysis is run on a Type 1 suspension in a laboratory column with a port 1.8m below the suspension surface. The data obtained are shown below.

Time (min)	TSS (conc, mg/L)
0	220
3	116
5	98
10	75
20	35
40	10
60	2

What will be the theoretical removal efficiency in a settling basin for an overflow of 432 m^2/m.day?

Solution of Example 2 :

Time (min)	TSS (conc, mg/L)	Mass Fraction Remaning	Vs (m/min)
0	200	-	-
3	116	0.58	1.8/3=0.6
5	98	0.49	1.8/5=0.36
10	75	0.38	1.8/10=0.18
20	35	0.18	1.8/20=0.09
40	10	0.05	1.8/40=0.045
60	2	0.01	1.8/60=0.03

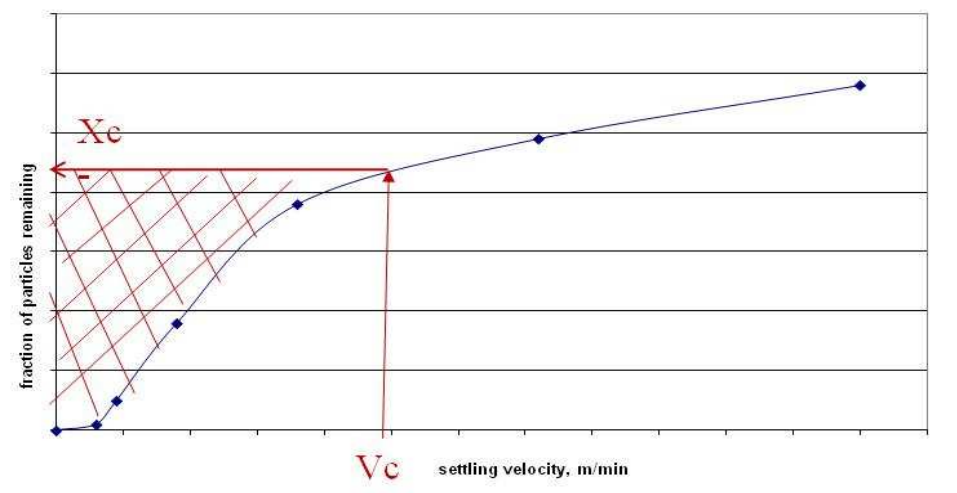

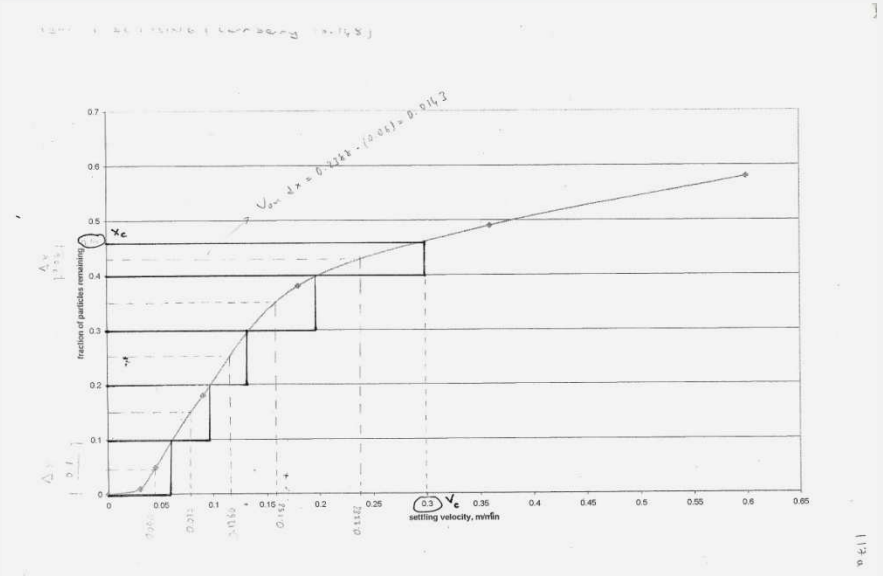

$$\text{Overflowrate}=V_c=432\,\frac{m^2}{m.d}\,\frac{1d}{24hr}\,\frac{1hr}{60\,min}=0.3m/min$$

dx	V	V.dx
0.06	0.2388	0.0143
0.1	0.158	0.0158
0.1	0.1266	0.01266
0.1	0.077	0.0077
0.1	0.044	0.0044

$X_c=0.46$

$$\text{Total removal} = \left(1-X_c\right)+\frac{1}{V_c}\int_0^{Xc} Vdx$$

$$=0.54+\frac{1}{0.3}(0.0143+0.0158+0.01266+0.0077+0.0044)$$

$$=0.54+\frac{0.05486}{0.3}$$

$$=0.72$$

$$=72\%$$

Example 4: A settling basin is designed to have a surface overflowrate of 32.6m/d. Determine the overall removal obtained for a suspension with the size distribution given in the table below. The specific gravity of the particles is 1.2 and water temperature is 20°C .

(μ =1.0087x10^{-3} Ns/m2, ρ =998.23 kg/m3)

Particle Size , mm	Weight Fraction Greater Than Size , %
0.1	10
0.08	15
0.07	40
0.06	70
0.04	93
0.02	99
0.01	100

Solution of Example 3:

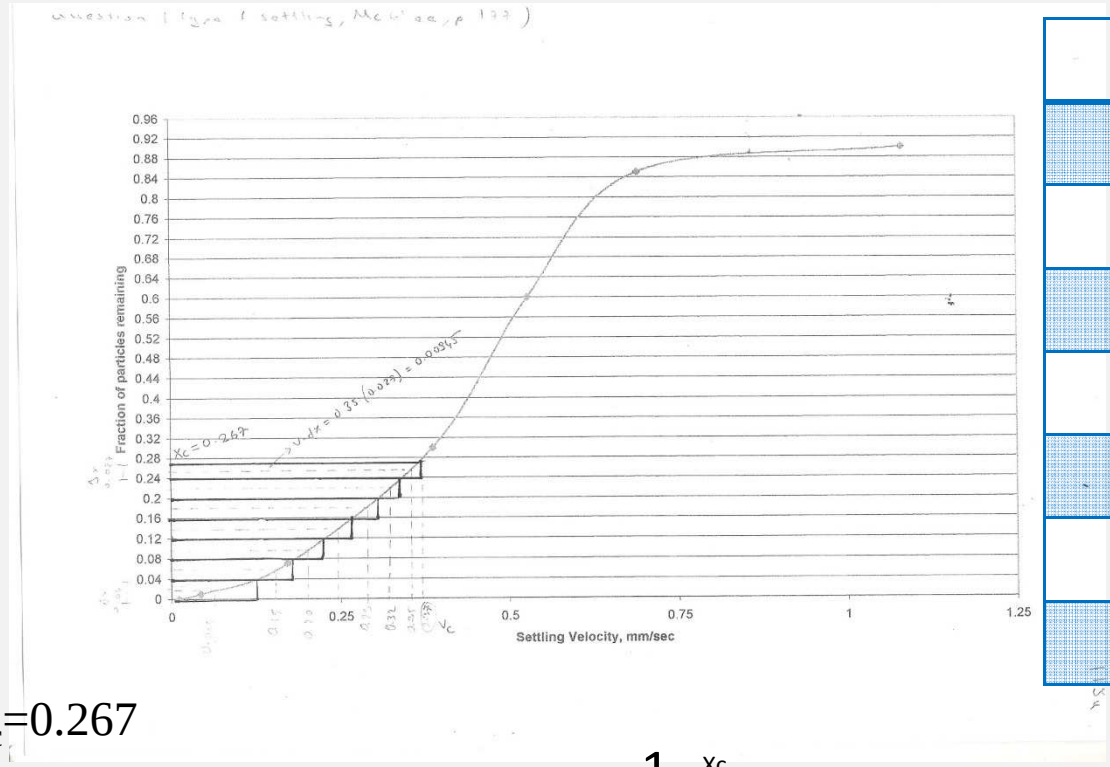

dx	V	V.dx
0.027	0.35	0.00945
0.04	0.32	0.0128
0.04	0.29	0.0116
0.04	0.25	0.01
0.04	0.20	0.008
0.04	0.15	0.006
0.04	0.065	0.0026

$X_c = 0.267$

$$\text{Total removal} = \left(1 - X_c\right) + \frac{1}{V_c}\int_0^{X_c} V\,dx$$

$$= 0.733 + \frac{1}{0.37}\left(0.00945 + 0.0128 + 0.0116 + 0.01 + 0.008 + 0.006 + 0.0026\right)$$

$$= 0.89$$

$$= 89\ \%$$

Type 2 – Flocculent Settling

(settling of flocculent particles in dilute suspension)

Chemical precipitates formed in coagulation and other destabilization processes tend to agglomerate while settling as a result of interparticle collisions

→ sizes change

→ shape change

→specific gravity change (as a result of entrapment of water in interstitial spaces)

Type 2 – Flocculent Settling (Continue)

As their size increases, they settle at a faster velocity → STOKE's law not applicable

→ impossible to develop a general formula for determining settling velocities of flocculant particles.

To determine the settling characteristics → batch settling column test
suspension of flocculant particles must be performed

Batch Settling Column Test For Type 2 Settling

Min . Diameter of column → about 150 - 200 mm
(to minimize sidewall effects)

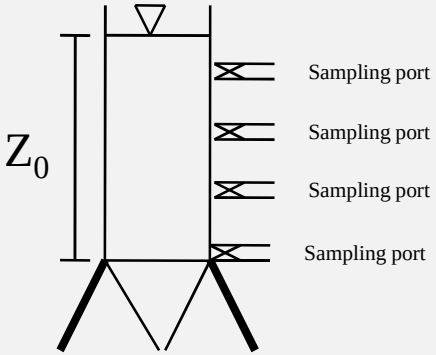

Height of column → depth of the proposed tank

Sampling ports→ are provided at equal intervals in height

Procedure:

1. Suspension to be tested is placed in the column
   Mixed completely to ensure uniform distribution of particles

3. At time=0, a portion of the sample is in order to determine the initial TSS concentration

4. The suspension is allowed to settle

5. At periodic time intervals, samples are removed through the ports located in different heights.

   For each sample withdrawn at each depth and for each time ,
   TSS analysis must be performed in order to determine the fraction remaining in suspension at each time interval

6. Percent removals
   X_{ij}= mass fraction removed (at i^{th} depth at j^{th} time interval) = $(1- C_{ij}/C_0) \times 100$

7. Percent removal lines (**isoremoval lines**) are drawn by interpolation.

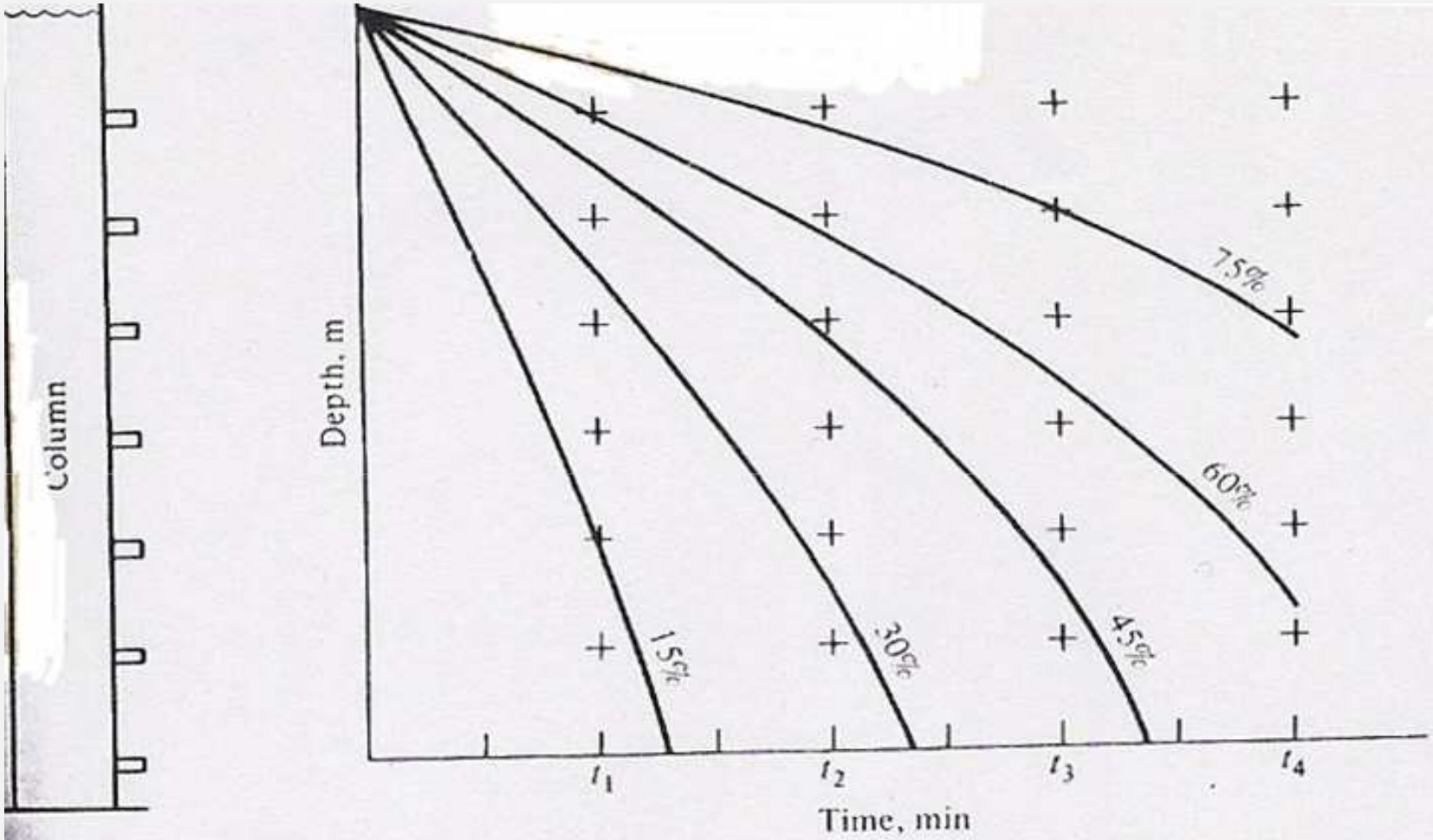

Figure 4-7 Isoremoval lines from settling analysis.

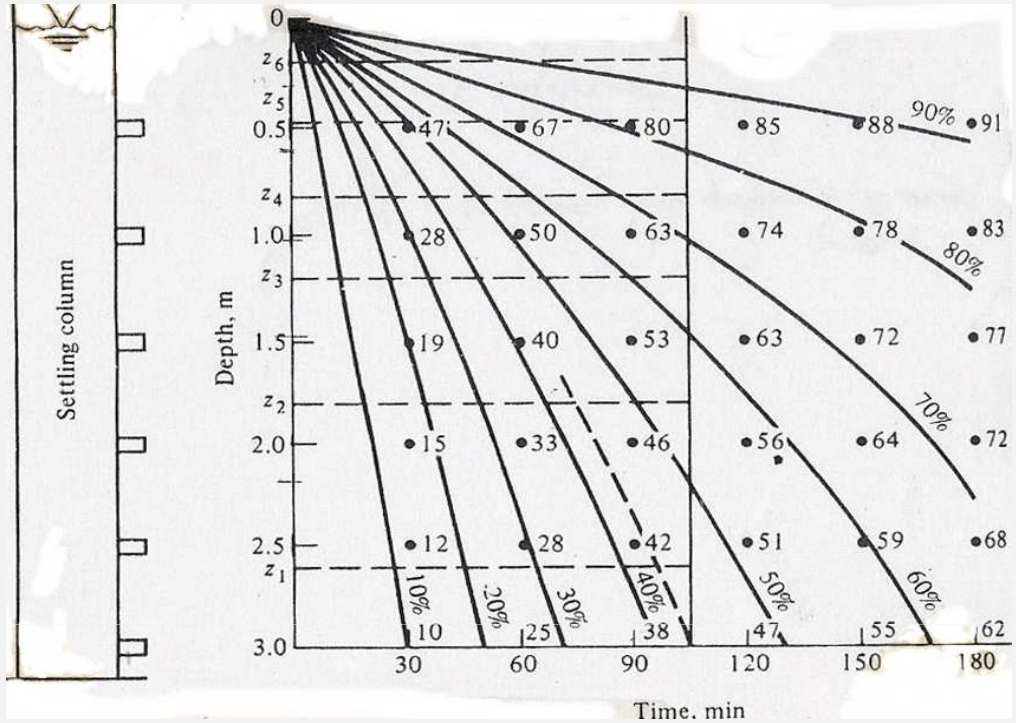

<u>To find the total removal at any chosen time;</u>

% removal of completely removed fraction

% removal of partially removed fraction

are found

<u>Initially;</u>

a vertical line from the chosen time is projected upward.

<u>% removal of completely removed fraction</u>

% read at chosen time→ % of particles that are completely removed.

% read at chosen time → % of particles having

Average settling velocity	≥	Design settling velocity

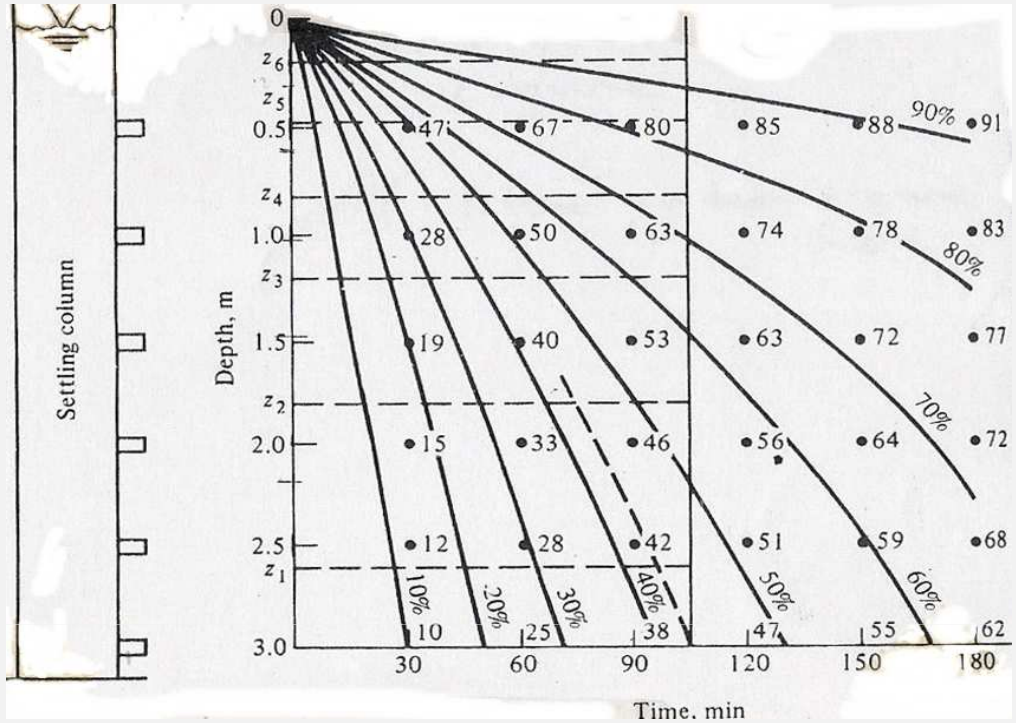

To determine the % removal of partially removed fractions

particles having

settling velocity <design settling velocity

will be removed in the ratio of average settling velocity of fraction

(ave depth reached in chosen time/chosen time)

design settling velocity *(total depth /chosen time)*

Median lines are drawn between the percent removal lines

Ave. depth reached → read from the intersection point of vertical line and drawn median line

$$\% \text{ partially removed} = \frac{\text{average depth reached by fraction}}{\text{total depth}} \times \text{Fraction}$$

Example 5 (Type 2 Settling):

A column analysis of a flocculating suspension is run in the apparatus shown below. The initial solids concentration is 250 mg/L. The resulting matrix is shown below. What will be the overall removal efficiency of a settling basin which is 3 m deep with a detention time of 1 h and 45 min.

Depth	Time of sampling, min					
m	30	60	90	120	150	180
0.5	133	83	50	38	30	23
1	180	125	93	65	55	43
1.5	203	150	118	93	70	58
2	213	168	135	110	90	70
2.5	220	180	145	123	103	80
3	225	188	155	133	113	95

SOLUTION:

Removal at each depth and time: $X_{ij} = \left(1 - \frac{C_{ij}}{C_o}\right)100$

Depth	Time of sampling, min					
m	30	60	90	120	150	180
0.5	47	67	80	85	88	91
1	28	50	63	74	78	83
1.5	19	40	53	63	72	77
2	15	33	46	56	64	72
2.5	12	28	42	51	59	68
3	10	25	38	47	55	62

→ Plot isoremoval lines by interpolation

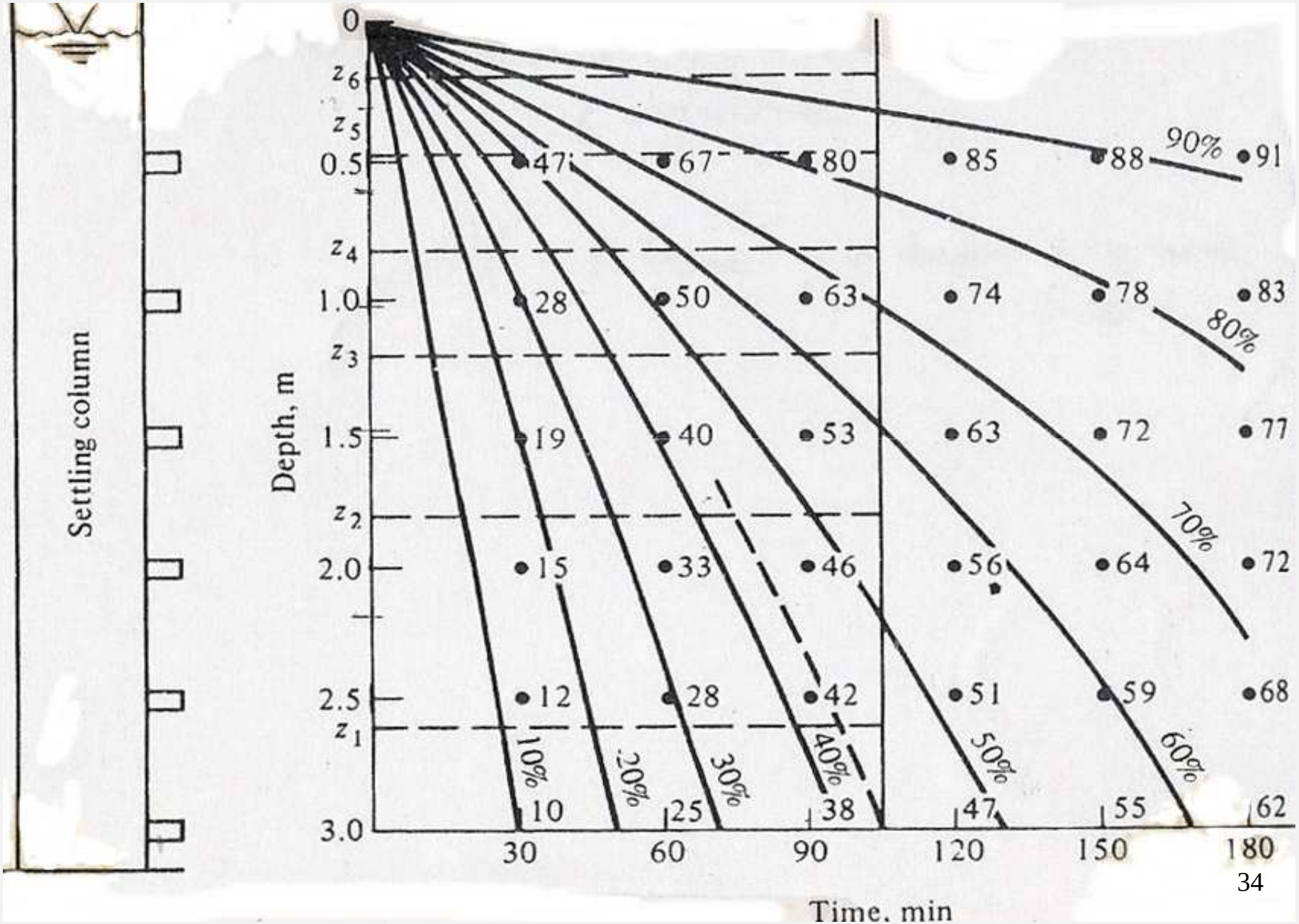
Settling column
Depth, m
Time, min
0
0.5
1.0
1.5
2.0
2.5
3.0
z_6
z_5
z_4
z_3
z_2
z_1
30
60
90
120
150
180
10%
20%
30%
40%
50%
60%
70%
80%
90%
10
25
38
47
55
62
12
28
42
51
59
68
15
33
46
56
64
72
19
40
53
63
72
77
28
50
63
74
78
83
47
67
80
85
88
91

Detention time = 1hr 45 min =105min

Draw a vertical line from 105 min

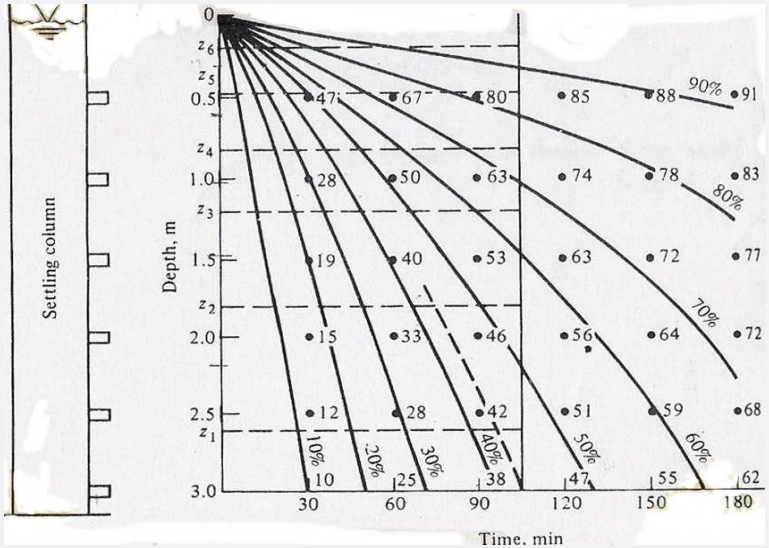

% removal of completely removed fraction at t=105min =43%

(from graph, by interpolation)

% removal of partially removed fraction :

bw 43-50% → fraction 7%, ave. depth reached by fraction 2.6 $\%\,\text{removal} = \frac{2.6}{3}7\% = 6.06\%$

bw 50-60% → fraction 10%, ave. depth reached by fraction 1.8 $\%\,\text{removal} = \frac{1.8}{3}10\% = 6\%$

bw 60-70% → fraction 10%, ave. depth reached by fraction 1.2 $\%\,\text{removal} = \frac{1.8}{3}10\% = 6\%$

bw 70-80% → fraction 10%, ave. depth reached by fraction 0.8 $\%\,\text{removal} = \frac{0.8}{3}10\% = 2.66\%$

bw 80-90% → fraction 10%, ave. depth reached by fraction 0.45 $\%\,\text{removal} = \frac{0.45}{3}10\% = 1.5\%$

bw 90-100% → fraction 10%, ave. depth reached by fraction 0.15 $\%\,\text{removal} = \frac{0.15}{3}10\% = 0.5\%$

Total %removal of partially removed particles at time=105 min=6.06 + 6 + 4 + 2.66 + 1.5 + 0.5 =20.72%

Total removal at time=105min = completely removed % + partially removed %

= 43 % + 20.72 %

= 63.72 %

NOTE : In applying isoremoval curves to design a tank, scale – up factors of

0.65 → the overflowrate

1.75 → for the detention time

are used to compensate for the side wall effects of the batch settling column.

TABLE 12.3

Typical Overflow Rates Used for the Design of Sedimentation Tanks in Water and Wastewater Treatment Plants

TYPE OF OPERATION	OVERFLOW RATE, m/d	
	Range	Typical*
Water treatment		
Alum coagulation		
Turbidity removal	40–60	48
Color removal	35–45	40
Lime softening		
Low magnesium	60–110	80
High magnesium	50–90	65
Wastewater treatment		
Primary treatment		
Primary only	30–60	40
Primary with waste activated sludge return	22–40	30
Secondary treatment		
Activated sludge (excluding extended aeration)	16–32	24
Activated sludge (following extended aeration)	10–24	16
Trickling filter	16–30	24

*The typical value is based on average plant flow; for peak flow use twice the typical value.

Typical design information on rectangular and circular sedimentation tanks used for primary treatment of wastewater

Tank type	Value: Range	Value: Typical
Rectangular:		
Depth, m	3.0–5.0	3.6
Length, m	15–90	25–40
Width, m[a]	3–24	6–10
Flight travel speed, m/min	0.6–1.2	1.0
Circular:		
Depth, m	3.0–5.0	4.5
Diameter, m	3.6–60.0	12–45
Bottom slope, mm/m	60–160	80
Flight travel speed, r/min	0.02–0.05	0.03

[a] If widths of rectangular mechanically cleaned tanks are greater than 6 m (20 ft), multiple bays with individual cleaning equipment may be used, thus permitting tank widths up to 24 m (80 ft) or more.

Note: m × 3.2808 = ft
mm/m × 0.012 = in/ft

TABLE 9-8
Typical design information for rectangular and circular sedimentation tanks used for primary treatment of wastewater

Item	Value: Range	Value: Typical
Rectangular		
Depth, ft	10–15	12
Length, ft	50–300	80–130
Width, ft[a]	10–80	16–32
Flight speed, ft/min	2–4	3
Circular		
Depth, ft	10–15	12
Diameter, ft	10–200	40–150
Bottom slope, in/ft	$\frac{3}{4}$–2	1
Flight travel speed, r/min	0.02–0.05	0.03

[a] If widths of rectangular mechanically cleaned tanks are greater than 20 ft, multiple bays with individual cleaning equipment may be used, thus permitting tank widths up to 80 ft or more.

Note: ft × 0.3048 = m
in/ft × 83.333 = mm/m

TABLE 11.6 Clarifiers in Water Treatment[a] (Droste, 1997)

Item	Value
Rectangular and Circular Clarifiers	
Depth, m (ft)	2.4–4.9 (8–16)
Overflow rate, $m^3/m^2/d$ ($gal/ft^2/d$)	20–70 (500–1 720)
Weir loading rate, $m^3/m/d$ (gal/ft/d)	Less than 1 250 (100 000)
Maximum length of rectangular basin, m (ft)	70–75 (230–250)
Circular basin maximum diameter, m (ft)	38 (125)
Upflow Solids Contact Clarifiers	
Depth, m (ft)	2.5–3 (8–10)
Overflow rate, $m^3/m^2/d$ ($gal/ft^2/d$)	24–550 (590–13 500)
Inclined Tube or Lamella Clarifiers	
Inclined length, m (ft)	1–2 (3.3–6.6)
Angle of inclination (°)	7–60
Tube diameter or plate spacing, cm (in)	Near 5 (2)
Overflow rates based on plan area, $m^3/m^2/d$ ($gal/ft^2/d$)	2–8 times rate for conventional clarifiers, 88–178 (2 160–4 370)
Depth, m (ft)	6–7 (20–23)

[a]Compiled from Gregory and Zabel (1990), ASCE and AWWA (1990), AWWA (1971), Culp and Culp (1974).

TABLE 11.7 Clarifiers in Wastewater Treatment[a] (Droste, 1997)

Item	Value
Primary Clarifiers[b]	
Overflow rate, $m^3/m^2/d$ ($gal/ft^2/d$)	
For average dry weather flow rate	32–49 (785–1 200)
For peak flow condition	49–122 (1 200–3 000)
Sidewater depth, m (ft)	2.1–5 (6.9–16.4)
Weir loading rate[c], $m^3/m/d$ (gal/ft/d)	125–500 (10 000–40 000)
Secondary Clarifiers	
Overflow rate[d], $m^3/m^2/d$ ($gal/ft^2/d$)	
For average dry weather flow rate	16–29 (393–712)
For peak flow condition	41–65 (1 006–1 595)
Sidewater depth, m (ft)	3.0–5.5 (9.8–18)
Floor slope	Nearly flat to 1:12
Maximum diameter, m (ft)	46 (150)

[a]From WEF and ASCE (1992), *Design of Municipal Wastewater Treatment Plants*, vol. 1, WEF, © WEF 1992.
[b]Criteria are based on the maximum ranges specified by a number of firms and agencies reported in WEF and ASCE (1992).
[c]Generally for average flow conditions.
[d]For circular or rectangular tanks.

TABLE 21-11. Basic Design Criteria for Horizontal-Flow Sedimentation Tanks[a] (Montgomery, 1985)

Description	Conventional-Type Sedimentation Basin	Sedimentation Basin for High-Rate Filters	
		Without High-Rate Settler	With High-Rate Settler
Surface loading			
For alum floc			
$m^3/m^2 \cdot d$	18–36	30–60	60–150[b]
gpm/ft^2	0.3–0.6	0.5–1.0	1–2.5[b]
For heavy flocs			
$m^3/m^2 \cdot d$	30–60	45–75	90–180[b]
gpm/ft^2	0.5–1.0	0.75–1.25	1.5–3[b]
Mean horizontal velocity			
m/min	0.15–0.9	0.3–1.2	0.05–0.13[b]
fpm	0.5–3	1–4	0.15–0.5[b]
Water depth, m	3–5	3–5	3–5
Detention time, min	120–240	60–120	6–25[c]
Weir loading			
$m^3/d \cdot m$	140–270	210–330	90–360[c]
gpm/ft	8–15	12–18	5–20[c]

[a] (1) High settler modules are commonly installed in the basin to cover up to 75 percent of basin surface area. (2) Cold weather regions generally use a conservative design criteria. (3) Weir loading requirement is somewhat questionable since some recent studies have shown that the long launders often do not yield better tank performance.

[b] These figures are for the surface loading of the settler module not the basin.

[c] These figures vary depending on the kind of settler selected.

TABLE 11.6 Clarifiers in Water Treatment[a] (Droste, 1997

Item	Value
Rectangular and Circular Clarifiers	
Depth, m (ft)	2.4–4.9 (8–16)
Overflow rate, $m^3/m^2/d$ ($gal/ft^2/d$)	20–70 (490–1 720)
Weir loading rate, $m^3/m/d$ (gal/ft/d)	Less than 1 250 (100 000)
Maximum length of rectangular basin, m (ft)	70–75 (230–250)
Circular basin maximum diameter, m (ft)	38 (125)
Upflow Solids Contact Clarifiers	
Depth, m (ft)	2.5–3 (8–10)
Overflow rate, $m^3/m^2/d$ ($gal/ft^2/d$)	24–550 (590–13 500)
Inclined Tube or Lamella Clarifiers	
Inclined length, m (ft)	1–2 (3.3–6.6)
Angle of inclination (°)	7–60
Tube diameter or plate spacing, cm (in)	Near 5 (2)
Overflow rates based on plan area, $m^3/m^2/d$ ($gal/ft^2/d$)	2–8 times rate for conventional clarifiers, 88–178 (2 160–4 370)
Depth, m (ft)	6–7 (20–23)

[a]Compiled from Gregory and Zabel (1990), ASCE and AWWA (1990), AWWA (1971), Culp and Culp (1974).

TABLE 11.7 Clarifiers in Wastewater Treatment[a] (Oaste, 1987)

Item	Value
Primary Clarifiers[b]	
Overflow rate, $m^3/m^2/d$ ($gal/ft^2/d$)	
For average dry weather flow rate	32–49 (785–1 200)
For peak flow condition	49–122 (1 200–3 000)
Sidewater depth, m (ft)	2.1–5 (6.9–16.4)
Weir loading rate[c], $m^3/m/d$ ($gal/ft/d$)	125–500 (10 000–40 000)
Secondary Clarifiers	
Overflow rate[d], $m^3/m^2/d$ ($gal/ft^2/d$)	
For average dry weather flow rate	16–29 (393–712)
For peak flow condition	41–65 (1 006–1 595)
Sidewater depth, m (ft)	3.0–5.5 (9.8–18)
Floor slope	Nearly flat to 1 : 12
Maximum diameter, m (ft)	46 (150)

[a]From WEF and ASCE (1992), *Design of Municipal Wastewater Treatment Plants*, vol. 1, WEF, © WEF 1992.

[b]Criteria are based on the maximum ranges specified by a number of firms and agencies reported in WEF and ASCE (1992).

[c]Generally for average flow conditions.

[d]For circular or rectangular tanks.

Example 6:

A city must treat about 15000 m^3/day of water. Flocculation particles are produced by coagulation and a column analysis indicates that an overflowrate of 20 m/day will produce satisfactory removal at a depth of 3.5m.Determine the size of

a) the required rectangular settling tanks

b) the required circular settling tanks

EXAMPLE 6 :

Design circular primary sedimentation tanks for a domestic wastewater treatment plant having Q_{avg}=70000m^3/d and Q_{peak} = 105000m^3/day.

Sedimentation Basin Design

Settling basins → rectangular (horizontal view)
square(occasionally used)
circular (radial flow)
} in plan view

A single rectangular basin will cost → more than a circular basin of the same size

However;

if numerous tanks are required → rectangular tanks can be constructed with common walls and be the most economical.

NOTE: a minimum of two basins should be provided in order to be able to inspect, repair , periodically clean and maintain one basin at a time while the other basin is in operation.

Sedimentation tanks can be divided into 4 different functional zones;

1. Inlet zone
2. Settling zone
3. Sludge zone
4. Outlet zone

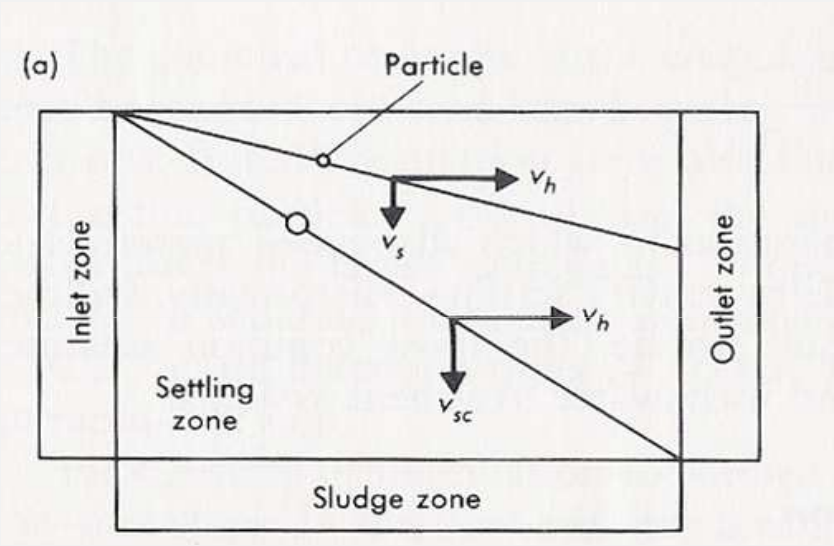

Inlet Structures

- should dissimate influent energy
- distribute the flow
- mitigate density currents
- minimize sludge blanket disturbance

→are designed to uniformly distrubute the influent suspension over the cross section of the settling zone.

For Rectangular Basins

full width inlet channels → effective spreading of flow introduce a vertical velocity component into sludge happen that may resuspend sludge.

inlet channels with submerged orifices

For sedimentation tank followed by flocculation →width of flocculation basin – width of settling tank (depths are different)

Depth of inlet channel = depth of flocculator basin

Pipe connection between flocculation unit & sedimentation

Low velocity in pipe → settling of floc
High velocity in pipe →breakage of floc

Permissible flow velocity to maintain floc suspension → 0.15 – 0.6 m/sec

If sedimentation tank does not adjoin a flocculator

→ inlet channels with submerged orifices do not extend down the full depth of the tank

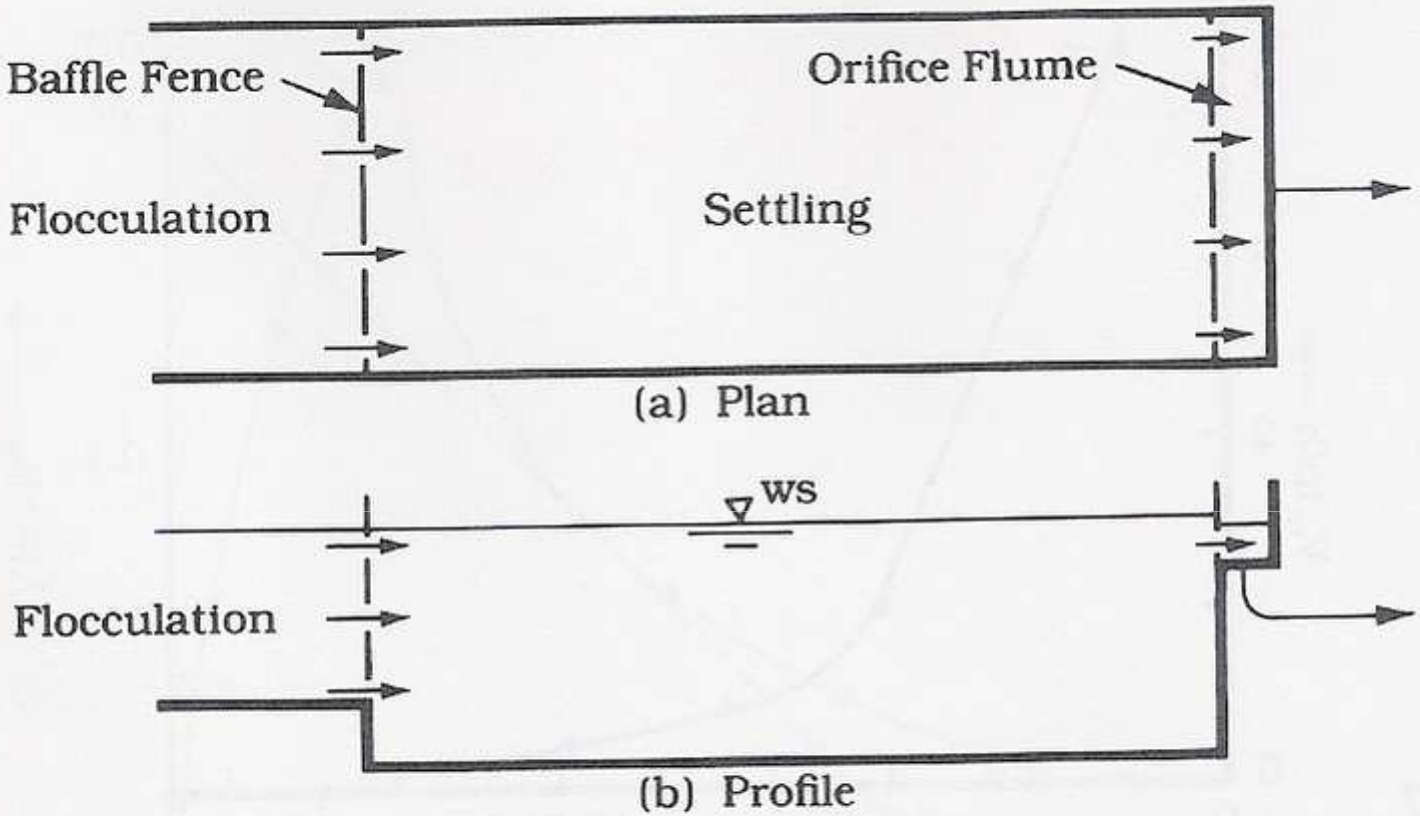

FIGURE 9.29 *Inlet and Outlet Details for a Rectangular Settling Tank with Orifice Flume Outlet Preceded by Flocculation*

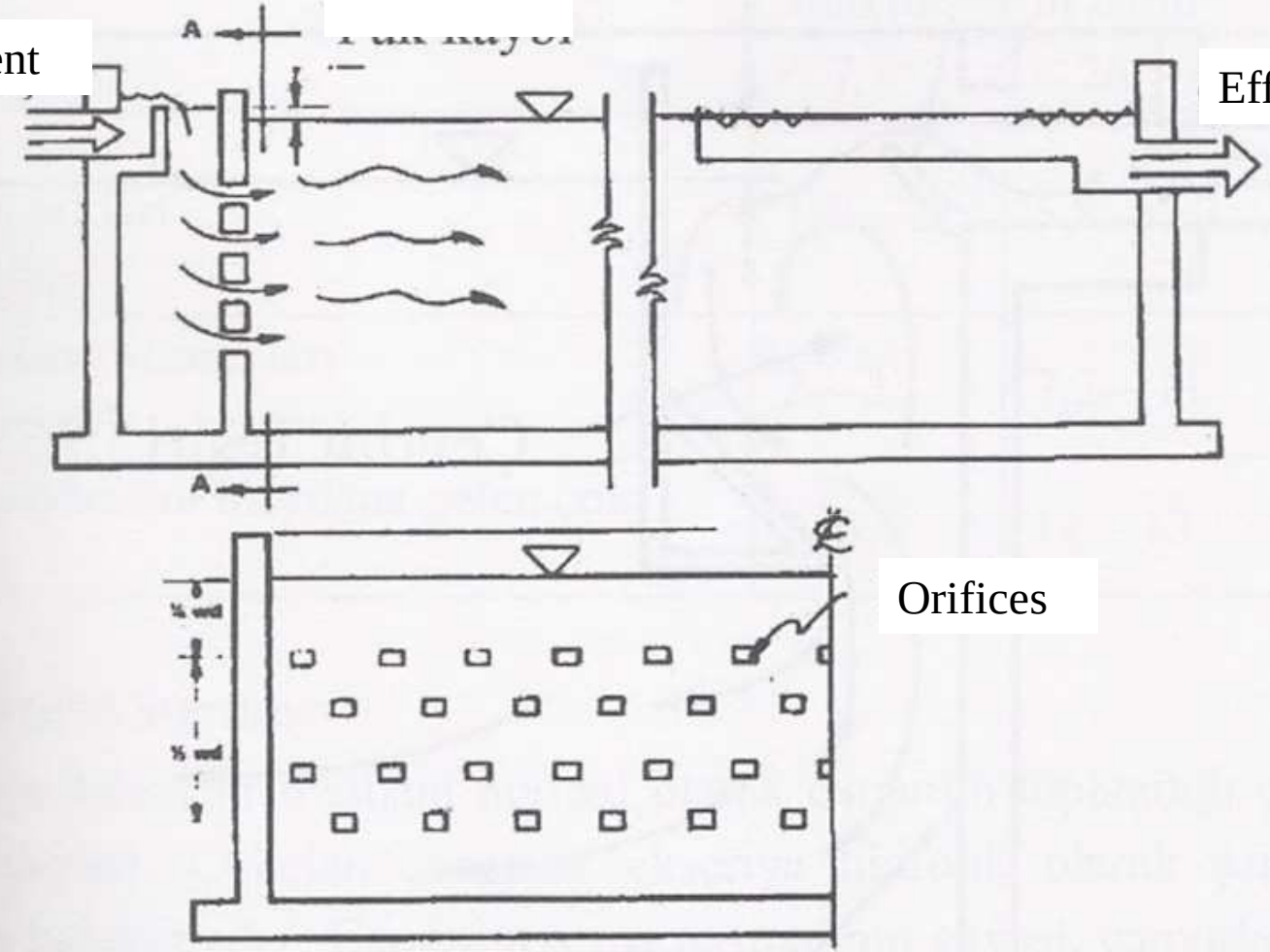
Influent
Effluent
A
A
Orifices

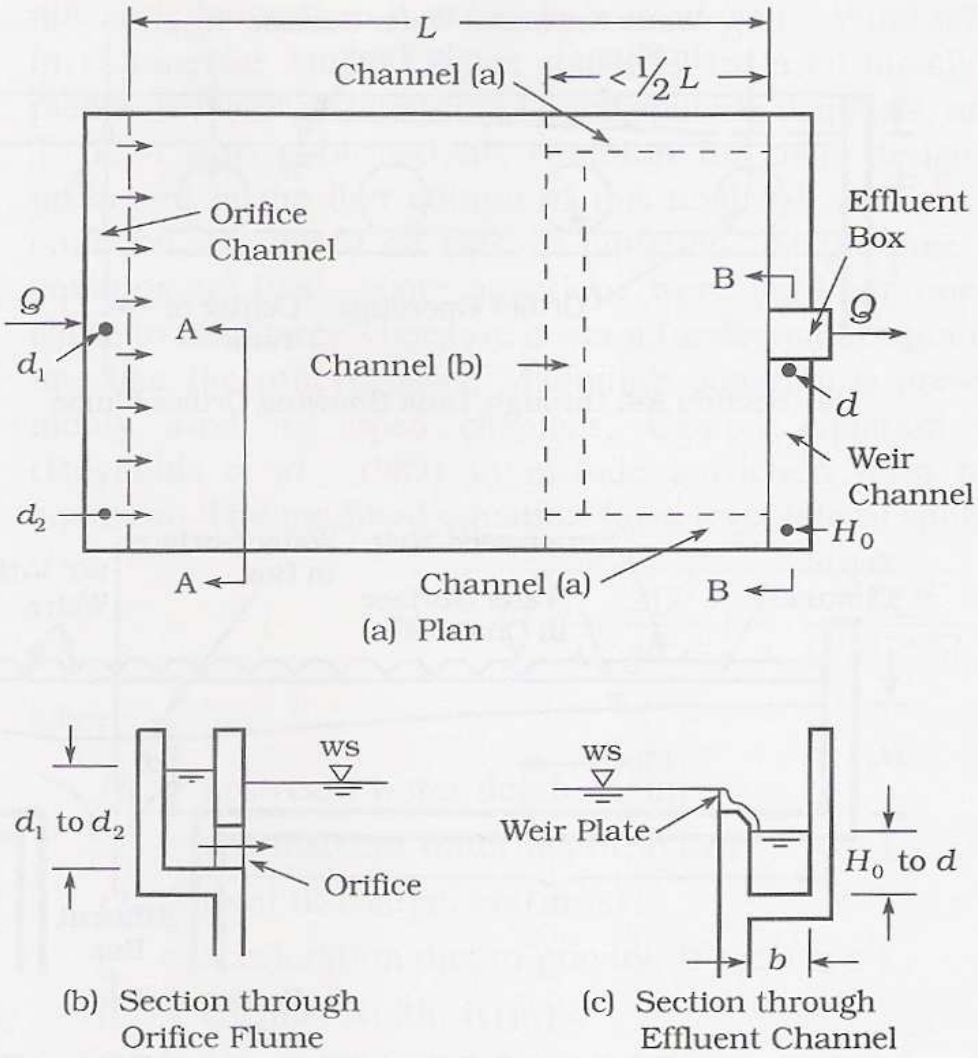

FIGURE 9.44 *Inlet and Outlet Details for a Rectangular Tank*

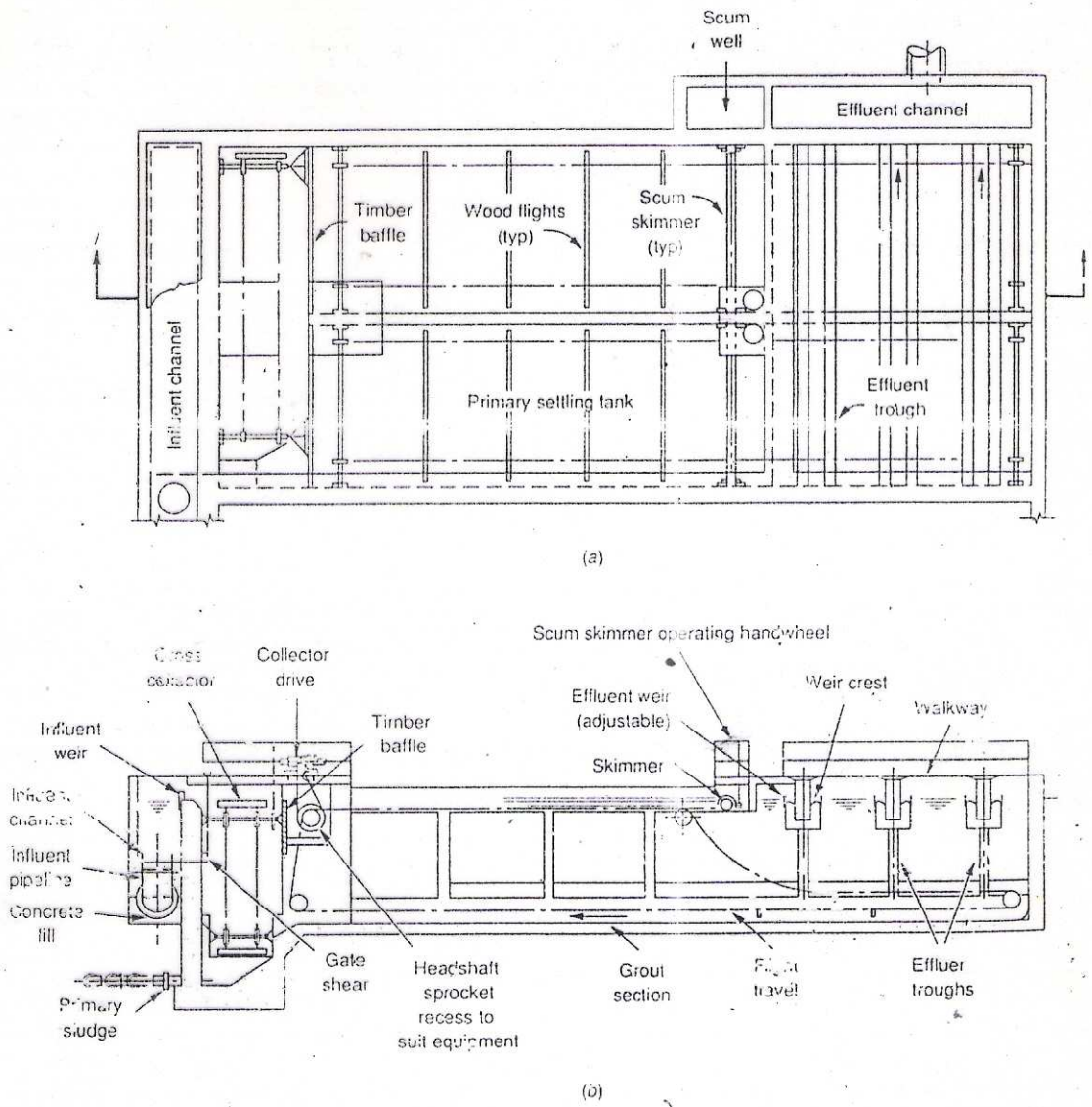

FIGURE 9-16 (Metcalf & Eddy, 1991).
Typical rectangular primary sedimentation tank.

Inlet Structures (continue)

For circular tanks

circular tanks→ radial flow

to achieve a radial flow patterninfluent is introduced →in the center of the tank
or
around the periphery of the tank

Central feed → water enters a circular well designed to distribute the flow equally in all directions

D of feed well = 15-20 % of tank diameter

Depth= 1- 2.5m

Velocity through the orificies on feed well
0.075- 0.15 m/sec

entrance pipe → suspended from bridge OR encased in concrete beneath the tank floor

For peripheral feed (not as uniform as central feed)

orifice channel around periphery of the tank

from the channel the flow discharges through the orifices into sedimentation tank

Sedimentation Facilities

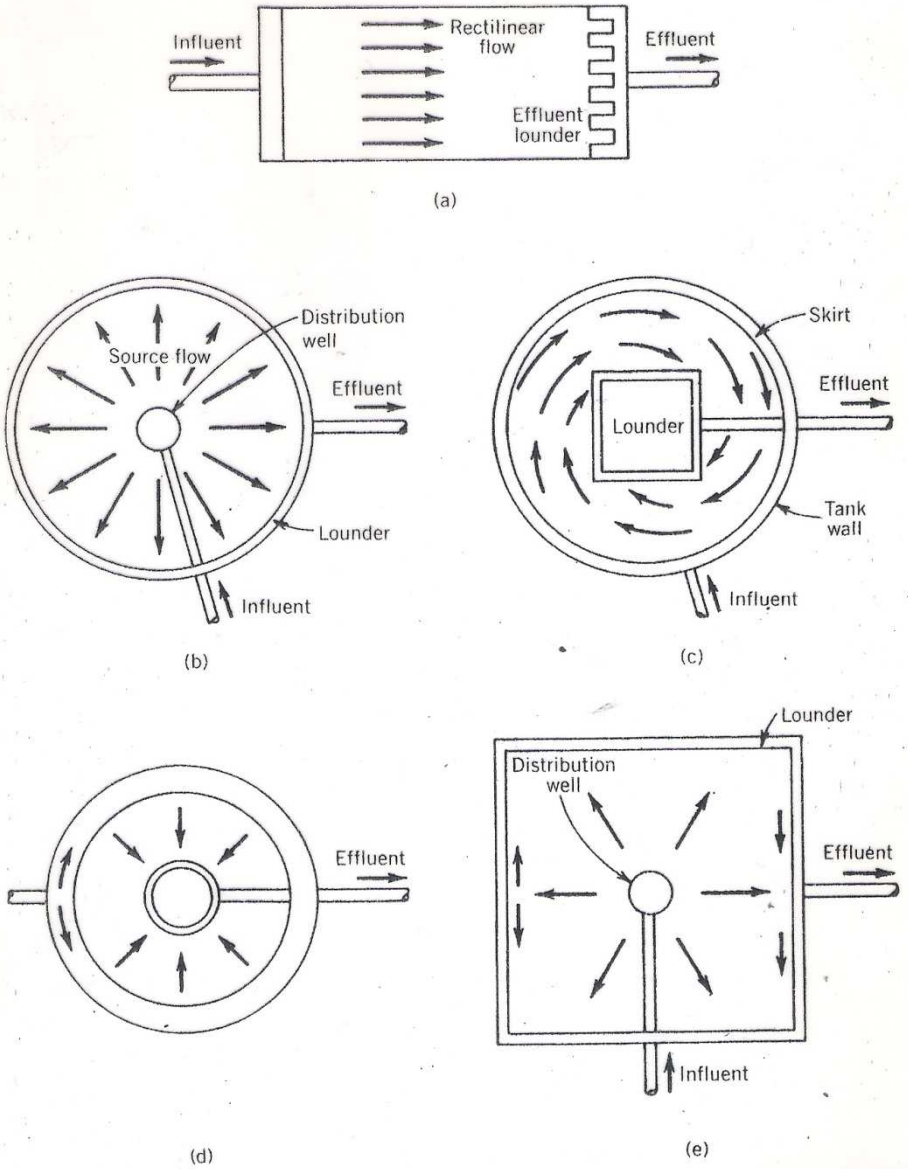

FIGURE 21-22. Flow patterns in sedimentation tanks: (a) Rectangular settling tank; (b) center feed, source flow; (c) peripheral feed, spiral flow; (d) peripheral feed, radial flow; (e) square, radial flow. (Reprinted from *Water Treatment Plant Design*. Copyright 1969, American Water Works Association, Inc.)

Figure 5–43

Typical energy-dissipating and flow distribution inlet for a center-feed sedimentation tank. The inner ring is used to create a tangential flow pattern. *(Randall, et al., 1992.)*

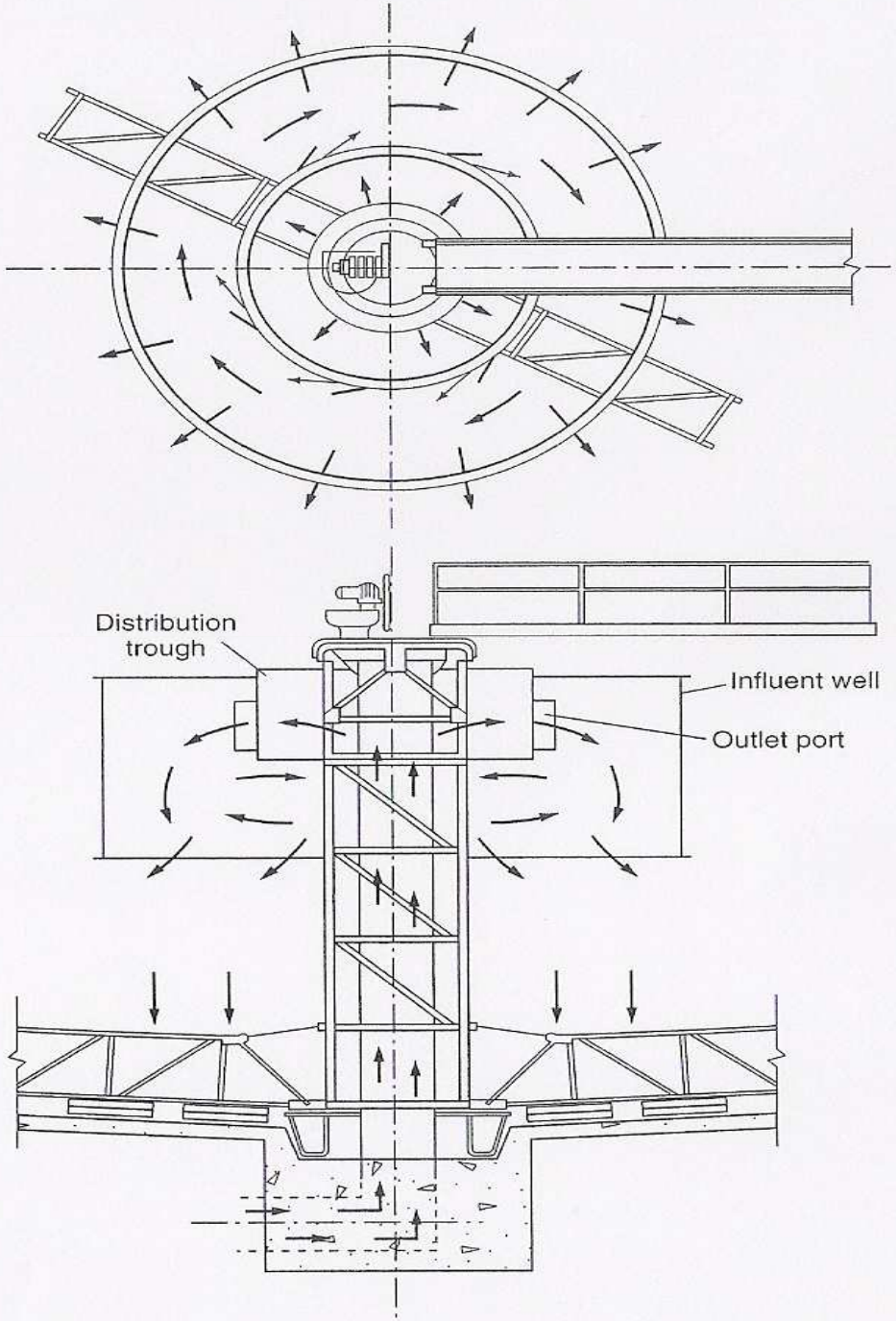

Figure 5-41

Typical circular primary sedimentation tanks: (a) center feed and (b) peripheral feed. (Crites and Tchobanoglous, 1998.)

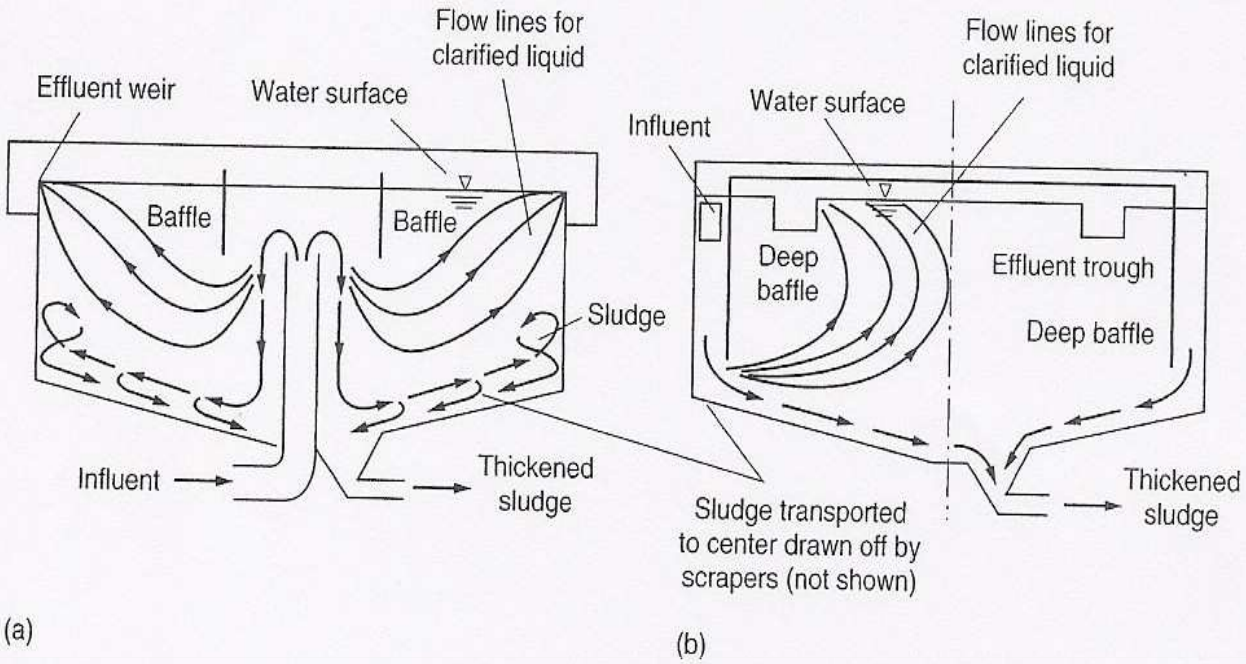

Figure 5-42

Typical circular primary sedimentation tank.

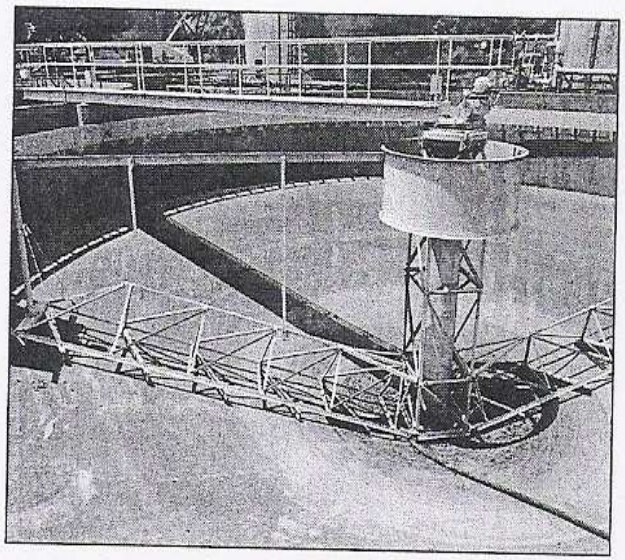

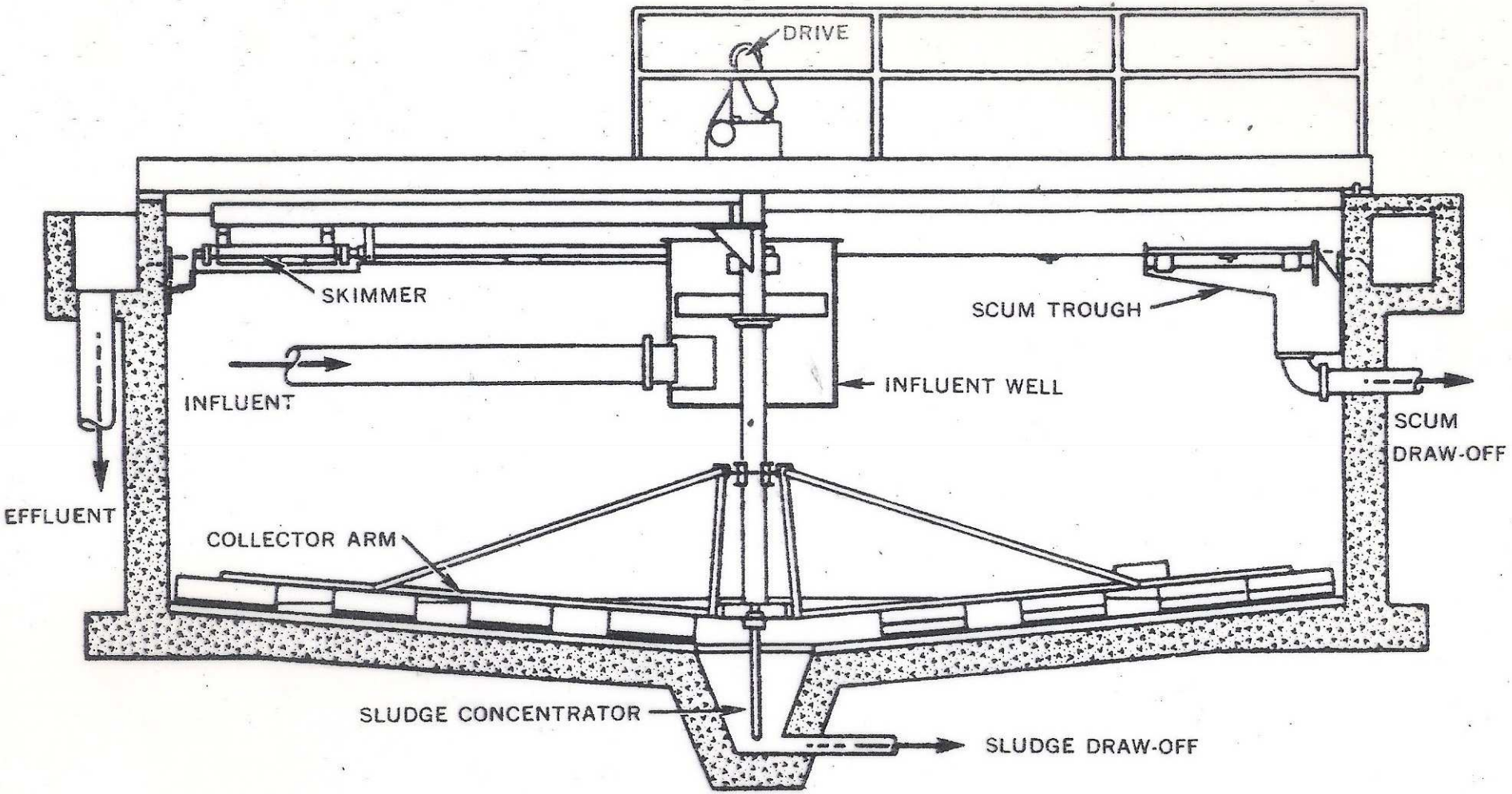

Figure 3–14 Circular clarifier design. (Courtesy of Walker Process equipment.)

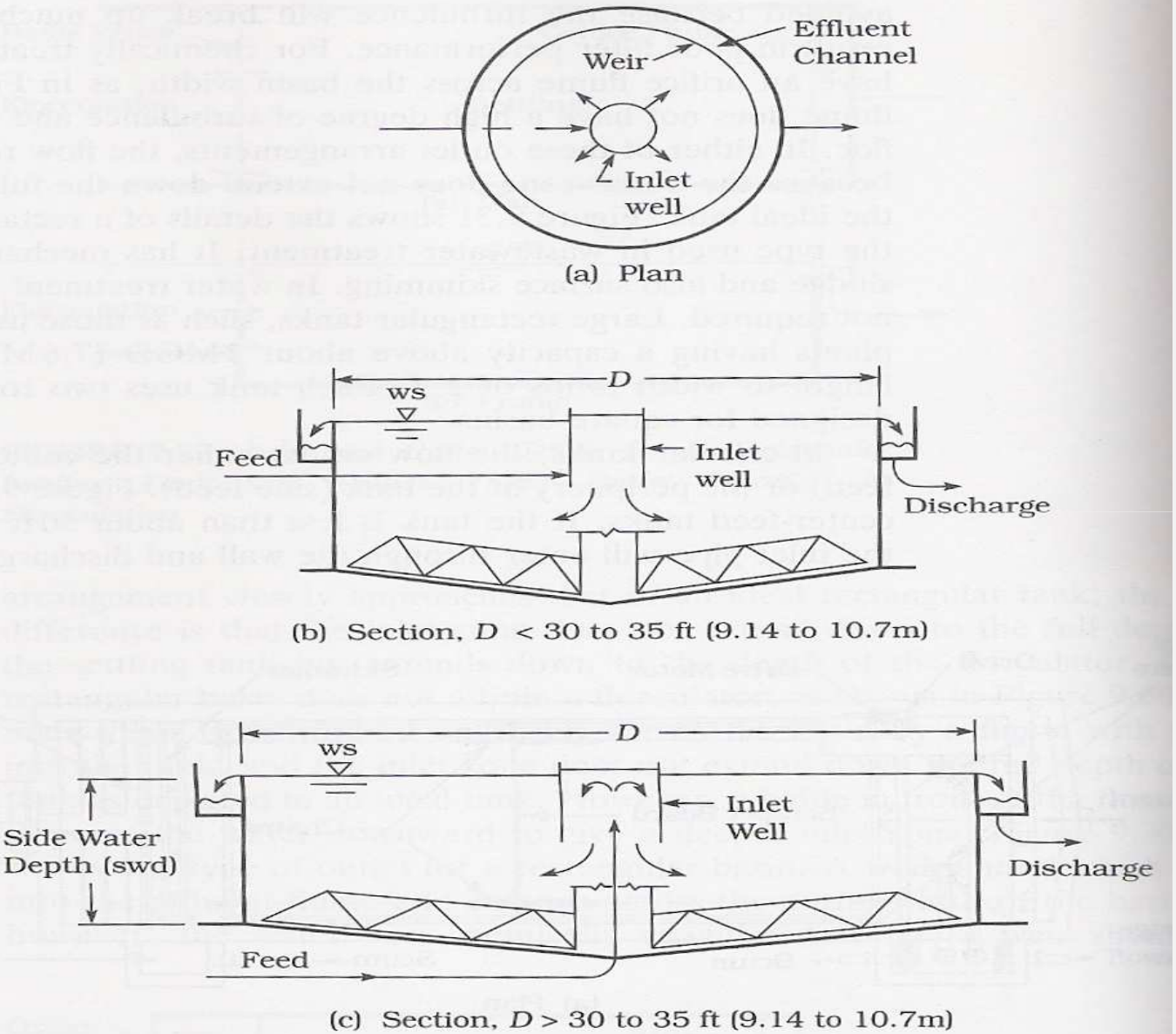

FIGURE 9.32 *Inlet and Outlet Details for Circular Tanks (Center Feed)*

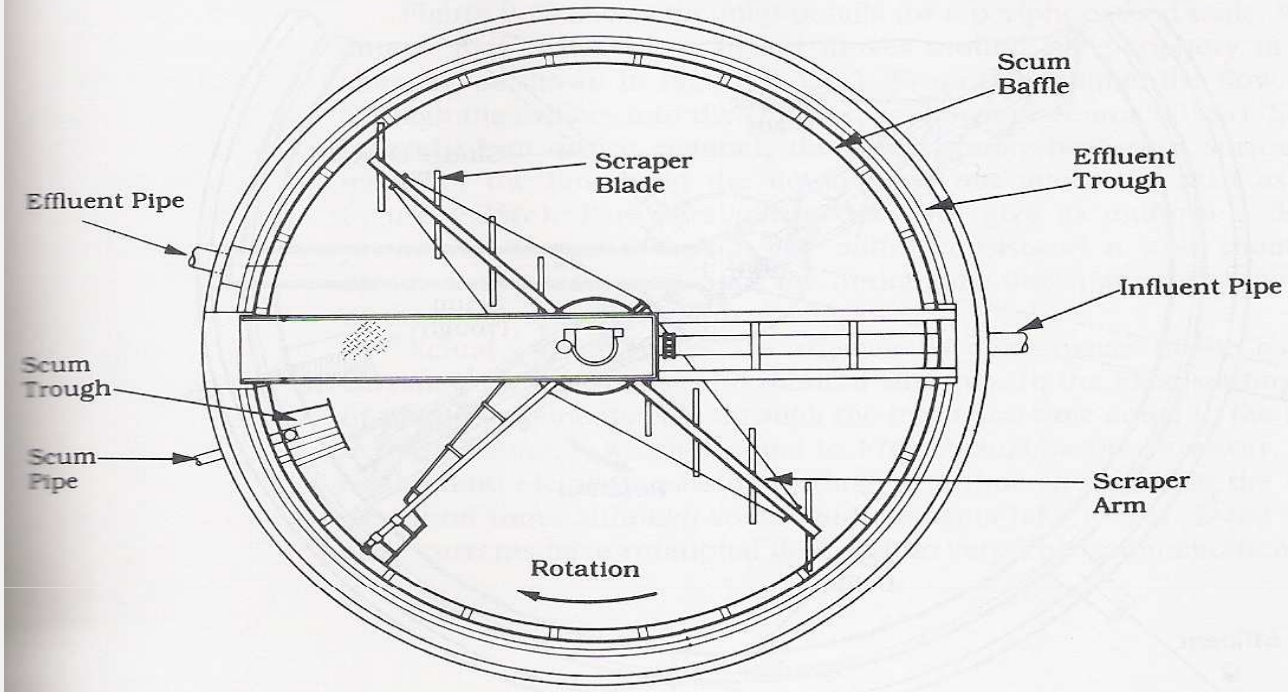

(a) Plan

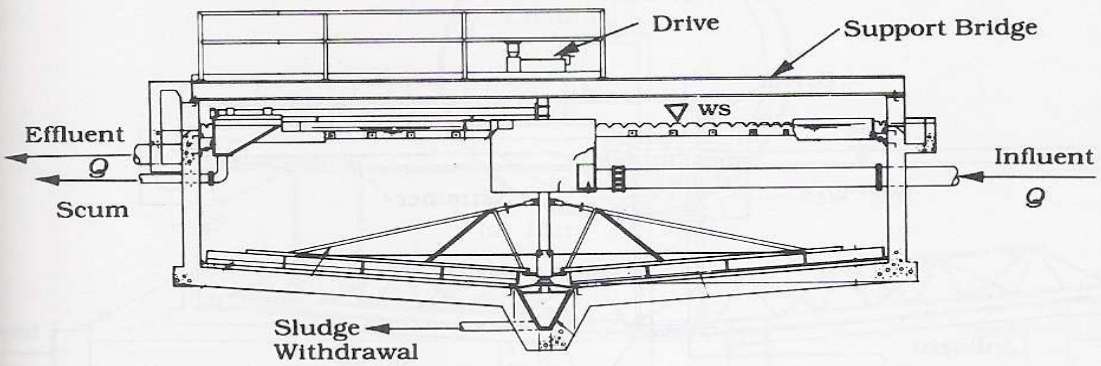

(b) Elevation

FIGURE 9.33 *Circular Settling Tank (Center Feed by Pipe through Wall)*
Courtesy of Infilco Degremont, Inc.

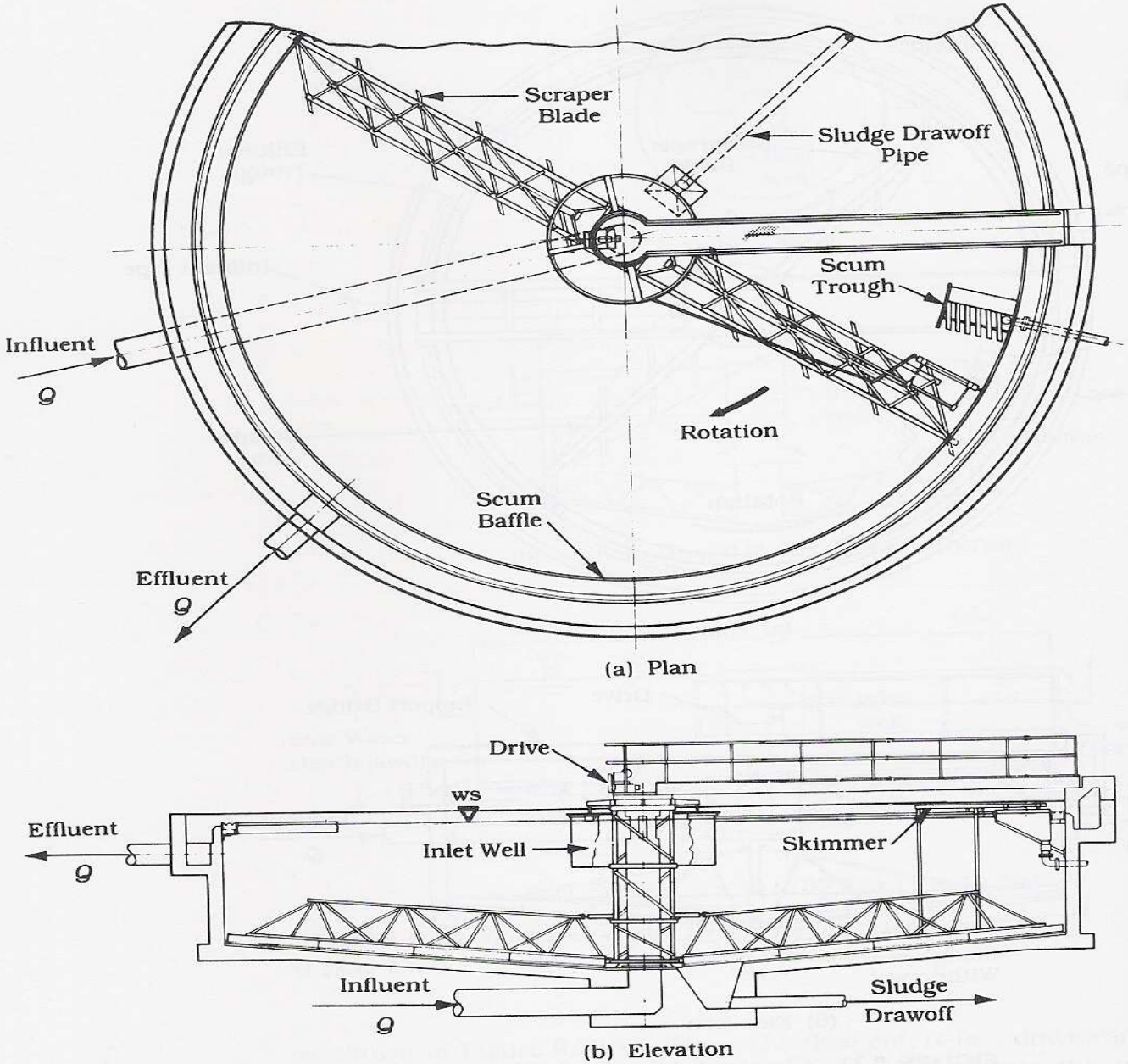

FIGURE 9.34 *Circular Settling Tank (Center Feed by Pipe under Tank Bottom)*
Courtesy of Infilco Degremont, Inc.

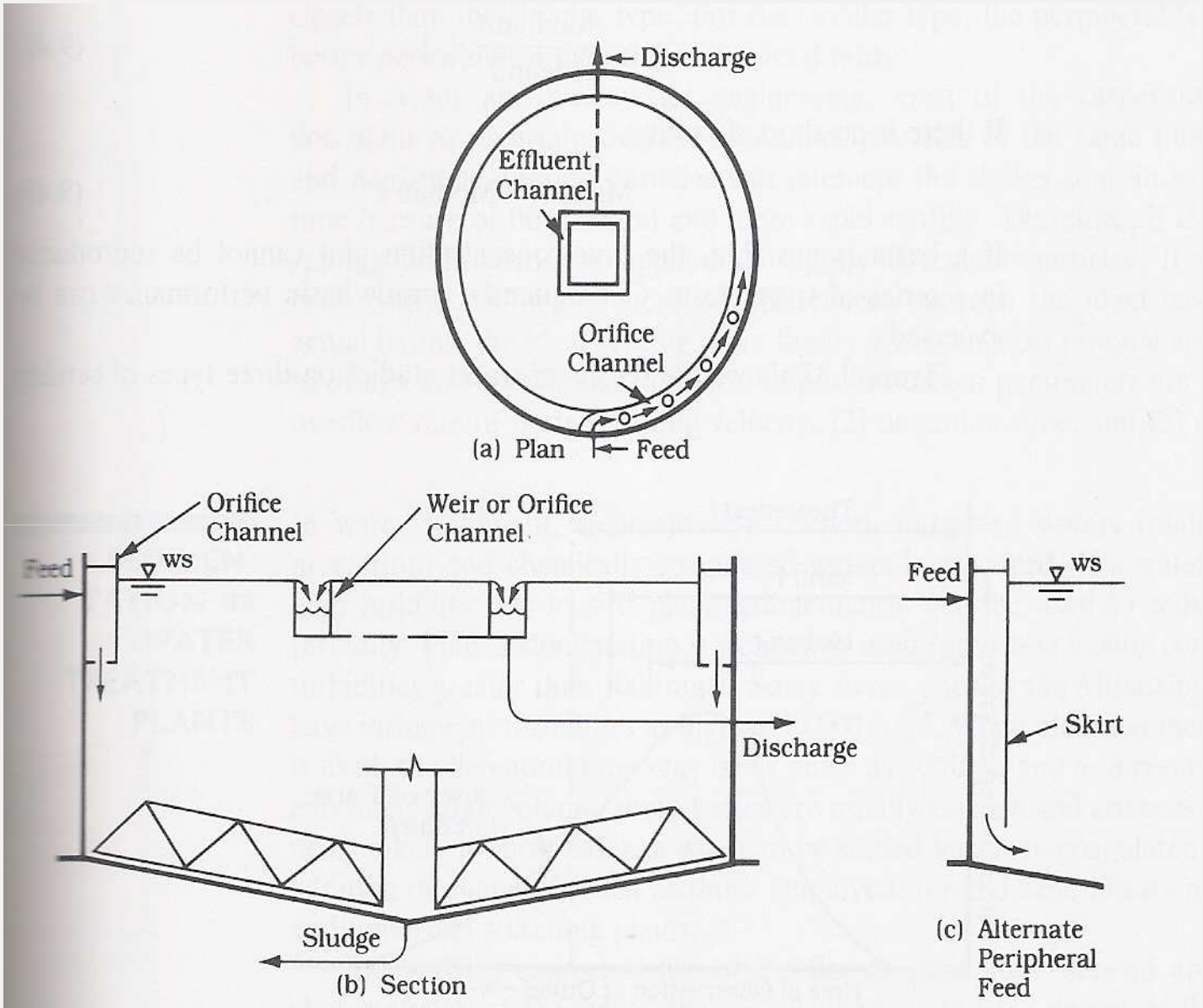

FIGURE 9.35 *Inlet and Outlet Details for a Circular Tank (Peripheral Feed)*

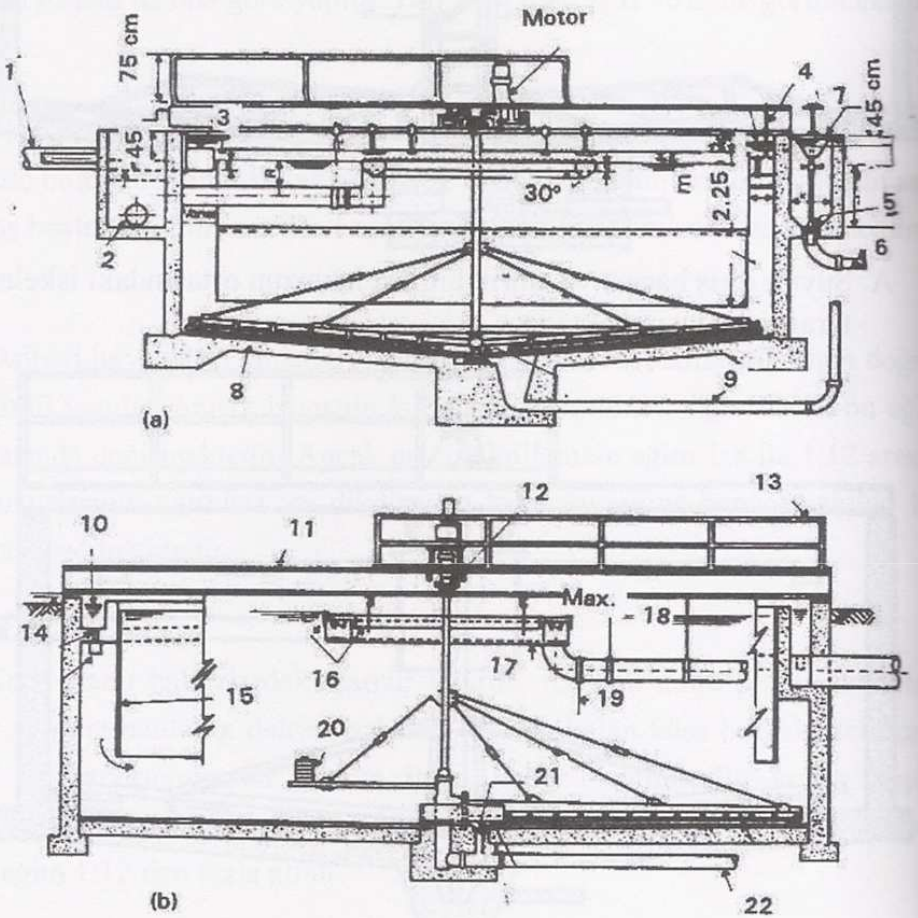

1. Giriş, 2. Çıkış, 3. Giriş oluğu, 4. Elle çalıştırılan köpük borusu, 5. Köpük vanası, 6. Köpük borusu, 7. 10 cm kanal, 8. Taban eğilimi %6, 9. Çamur borusu, 10. Giriş kanalı, 11. Köprü, 12. Sonsuz vida, 13. Korkuluk, 14. Orifis, 15. Dalgıç perde, 16. Ayarlanabilen savak, 17. Çıkış kanalı, 18. EYSS, 19. Çıkış borusu, 20. Karşı ağırlık, 21. Dren, 22. Çamur çıkışı

Şekil 6.21. Çevreden beslenen dairesel çöktürme havuzları

Figure 3.28. Inlet and Outlet Details for Circular Tanks (Center Feed)

(Reynolds, 1982)

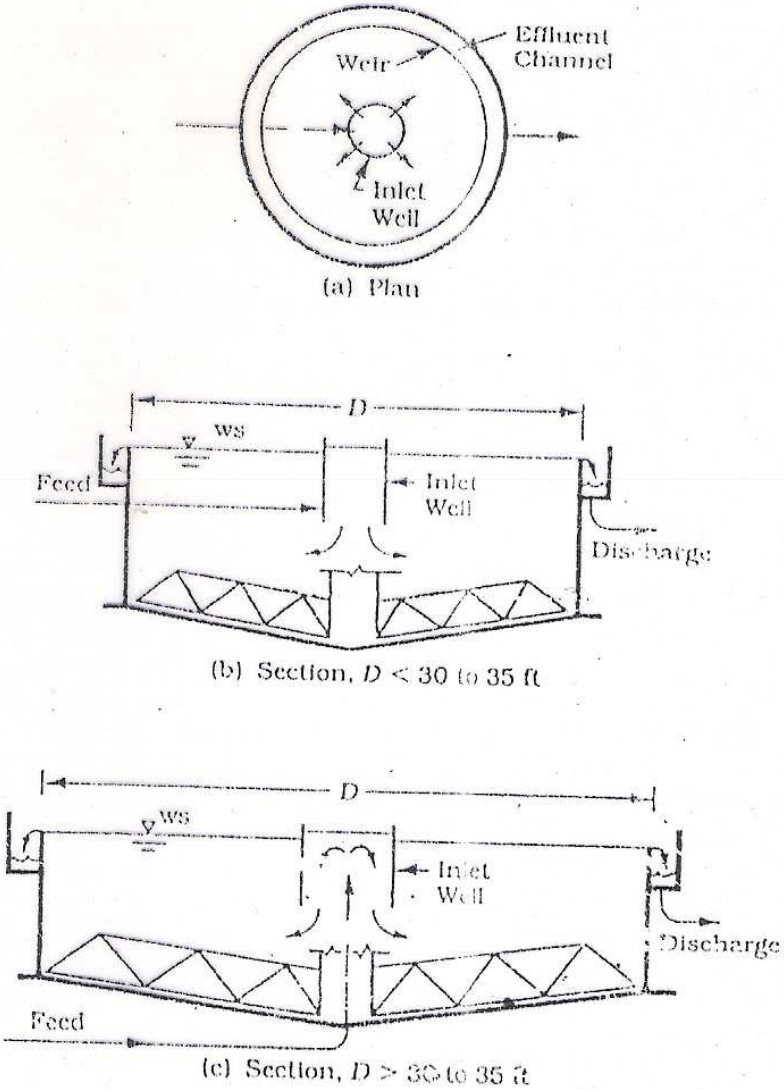

Figure 3.31. Inlet and Outlet Details for a Circular Tank (Peripheral Feed) (Reynolds, 1982)

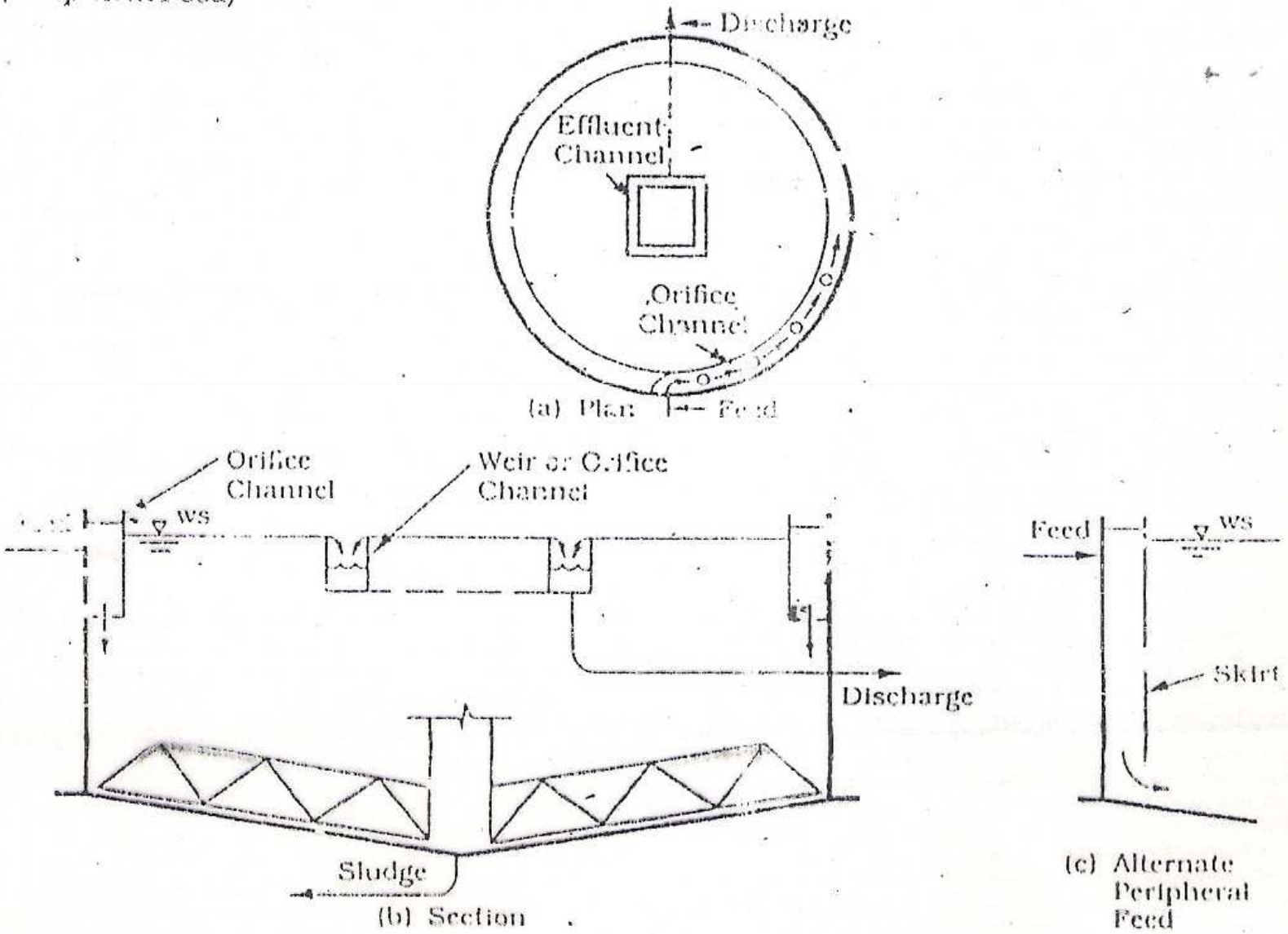

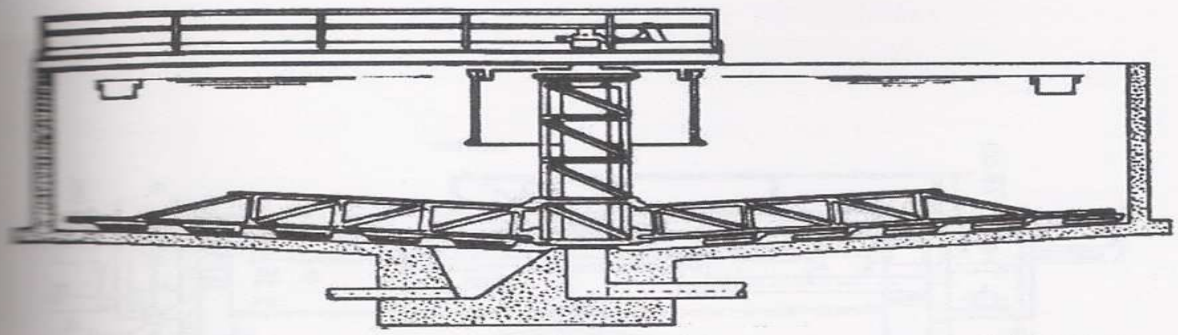

A. Suyun giriş bacası ve tahrik ünitesi havuzun ortasındaki iskele tarafından taşınmaktadır.

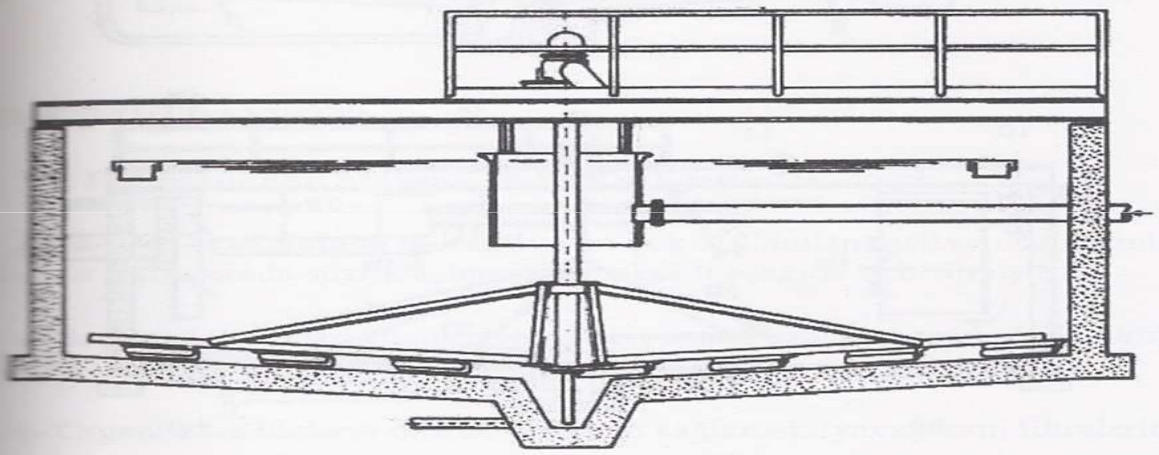

B. Suyun giriş bacası ve tahrik ünitesi köprü tarafından taşınmaktadır.

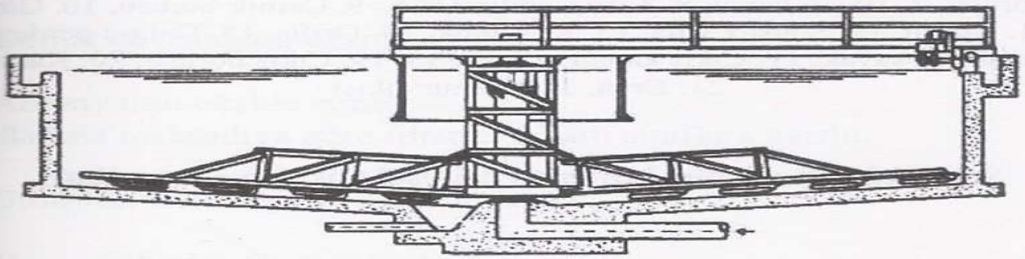

C. Cer makinası çevrede olup çamur toplayıcısı merkezdeki iskele tarafından taşınmaktadır.

Şekil 6.20. Dairevi çöktürme havuzu kesitleri

Settling Zone

It depends on the following desing parameters:

→ Settling characteristics of the suspended matter

→ Surface loading (over flowrate)

→ Width / length ratio OR diameter

→ Detention time

Sludge Zone

Rectangular tanks → the bottom is slightly sloped to facilitate sludge scraping

a pair of endless conveyor chains

bridge – type mechanism

continously pulls the settled material into a sludge hopper where it is pumped out periodically.

Motion of scraper →momentarily resuspend lighter particles a few cm above the scraper blades

Excessive horizontal velocity
(for the case of rectangular basins) → move these materials towards outlet zone.

To prevent this,

horizontal velocity -→ < 9 m/hr for light flocculant suspensions
≈ 36 m/hr for heavier discrete suspensions

Bridge type mechanism → travels up and down the tank

one or more scraper blades are suspended from the bridge

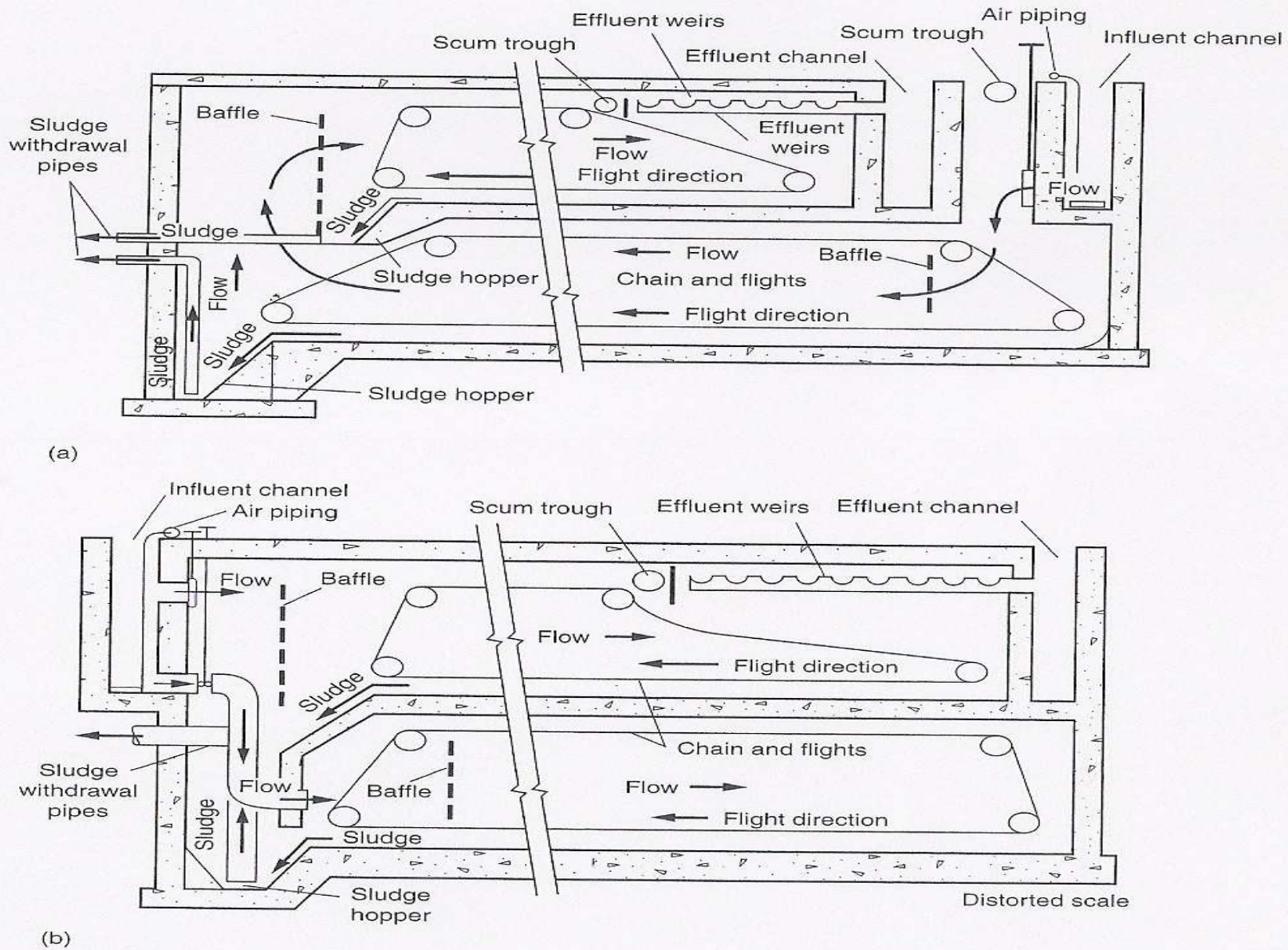
Effluent weirs
Scum trough
Effluent channel
Scum trough
Air piping
Influent channel
Sludge withdrawal pipes
Baffle
Effluent weirs
Flow
Flight direction
Flow
Sludge
Sludge
Flow
Baffle
Sludge hopper
Chain and flights
Flow
Flight direction
Sludge
Sludge
Sludge hopper
(a)
Influent channel
Air piping
Scum trough
Effluent weirs
Effluent channel
Flow
Baffle
Flow
Flight direction
Sludge
Chain and flights
Sludge withdrawal pipes
Flow
Baffle
Flow
Flight direction
Sludge
Sludge
Sludge hopper
Distorted scale
(b)

Figure 5–45

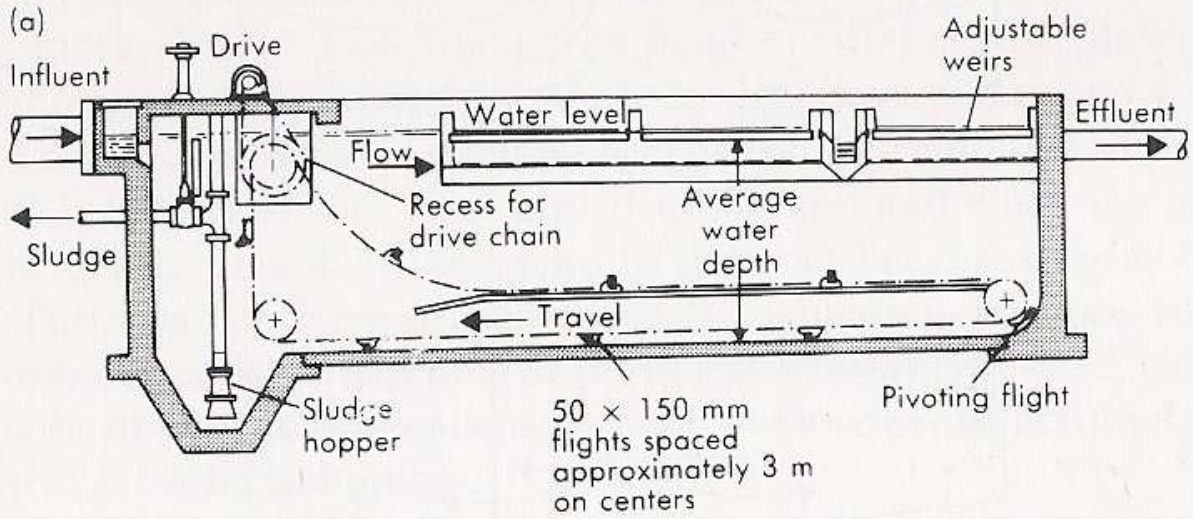

FIGURE 12.19

Typical sedimentation tanks: (a) rectangular (longitudinal section without skimmer)

Source: Courtesy of Walker Process.

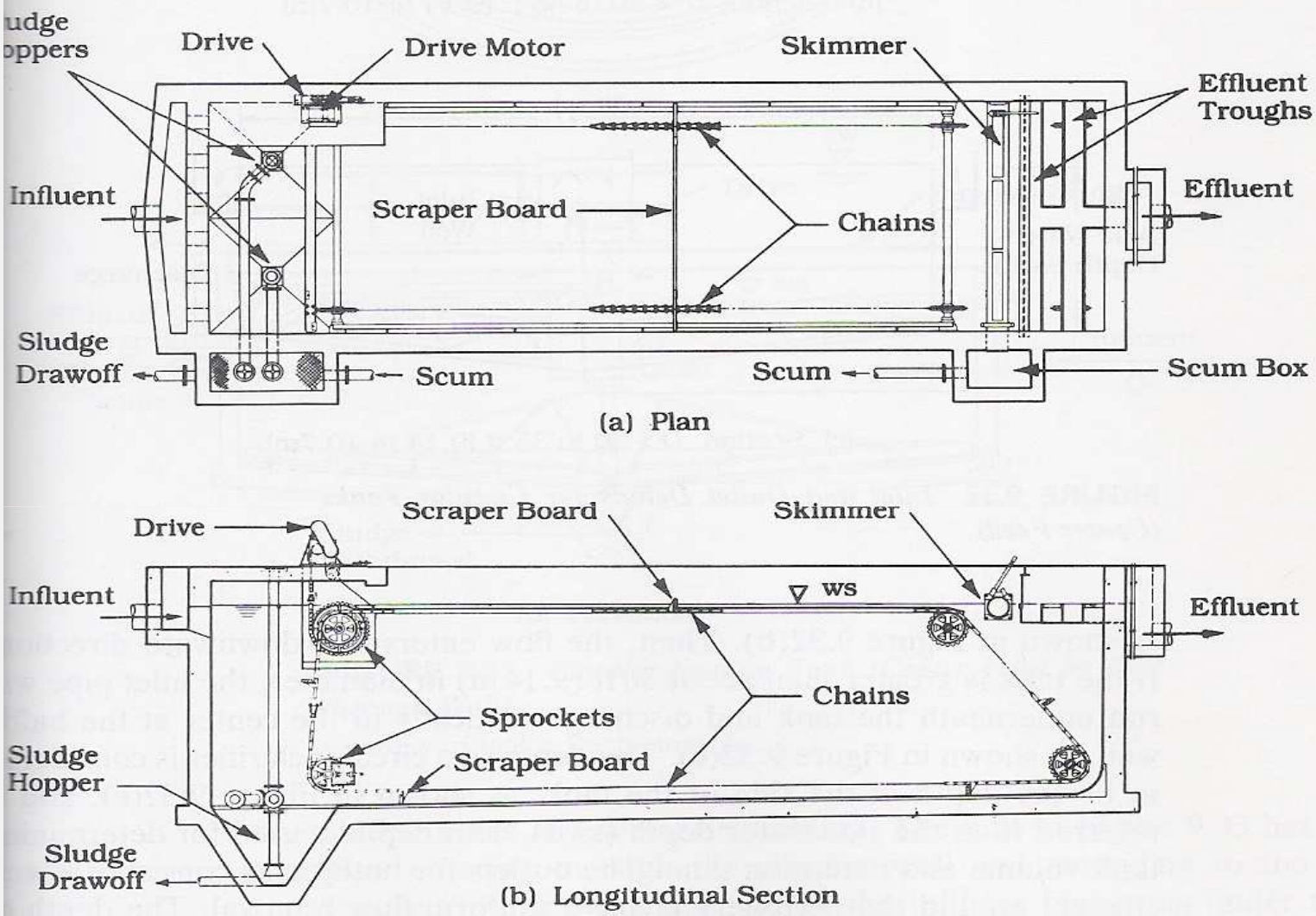

FIGURE 9.31 *Rectangular Settling Tank*

Courtesy of Walker Process Equipment, Division of McNish Corporation.

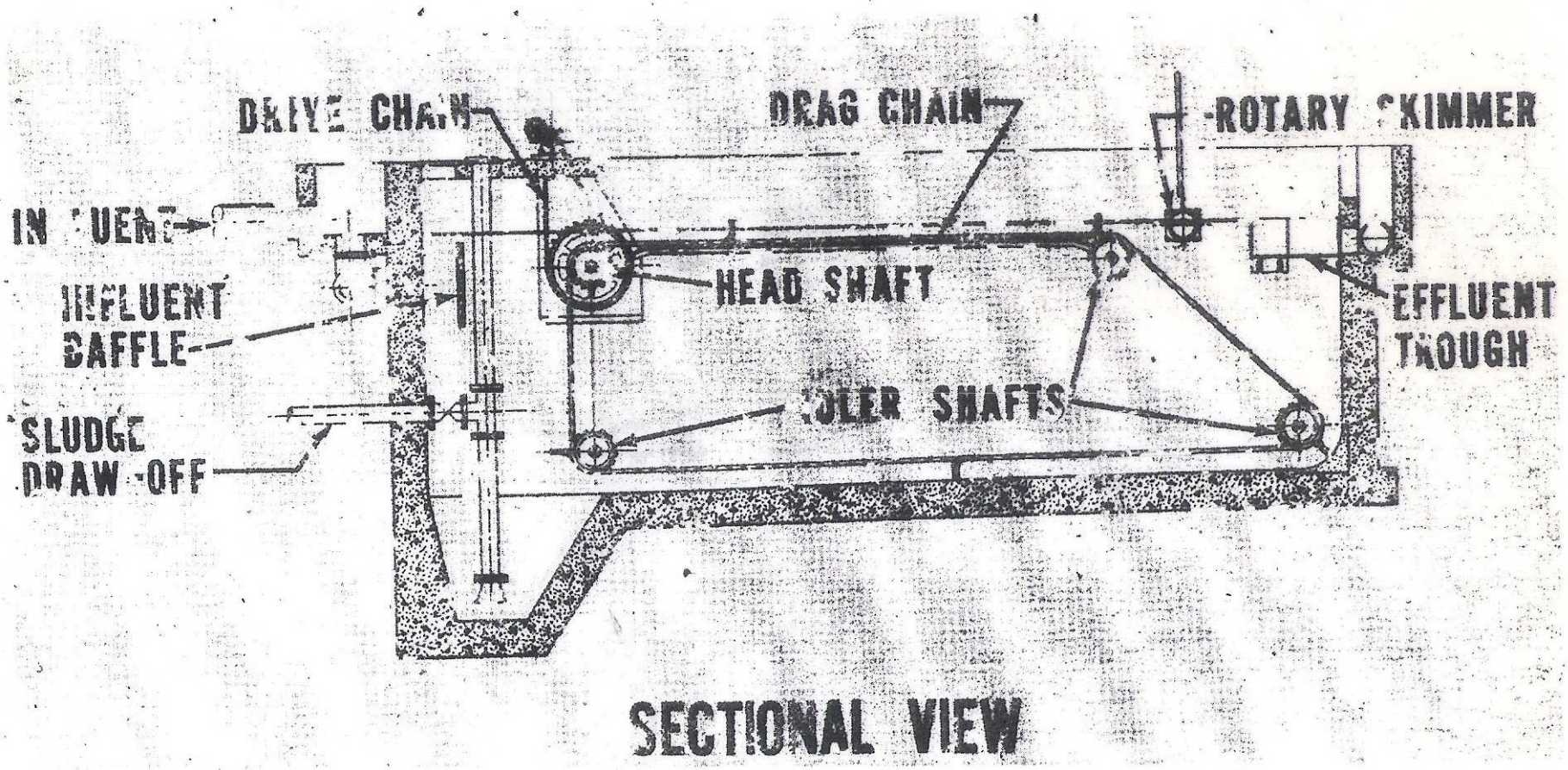

Figure 3–15 Rectangular clarifier design. (Courtesy of Clow Corporation.)

(Montgomery, 1985)

Sedimentation Facilities

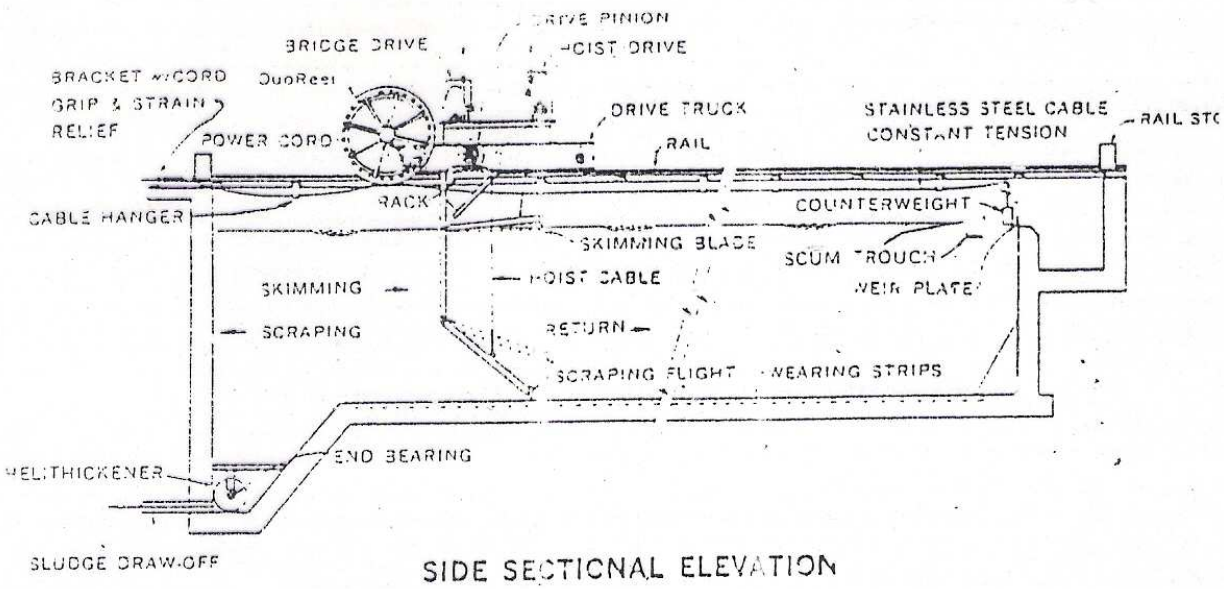

SIDE SECTIONAL ELEVATION

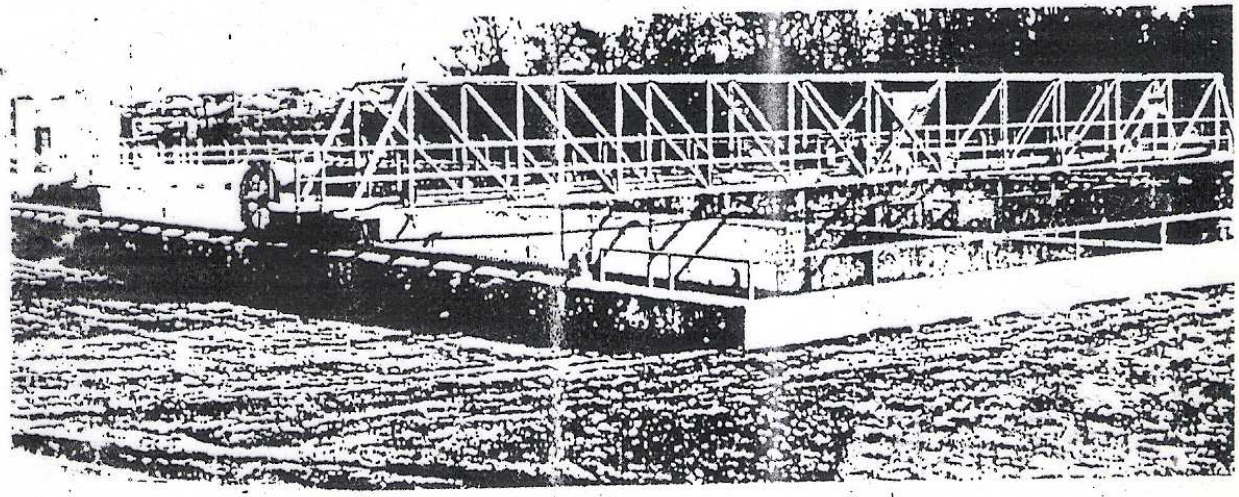

FIGURE 21-25. Traveling bridge sludge collector. (Courtesy of Walker Process.)

Circular tanks

The bottom of the tank is sloped to form an inverted cone and the sludge is scraped to a relatively small hopper located near the center of the tank

Velocity or scraper → important

Very high velocty → resuspension of settled particles (<5mm/sn)

Travelling bridge with sludge suction headers and pumps → not very good

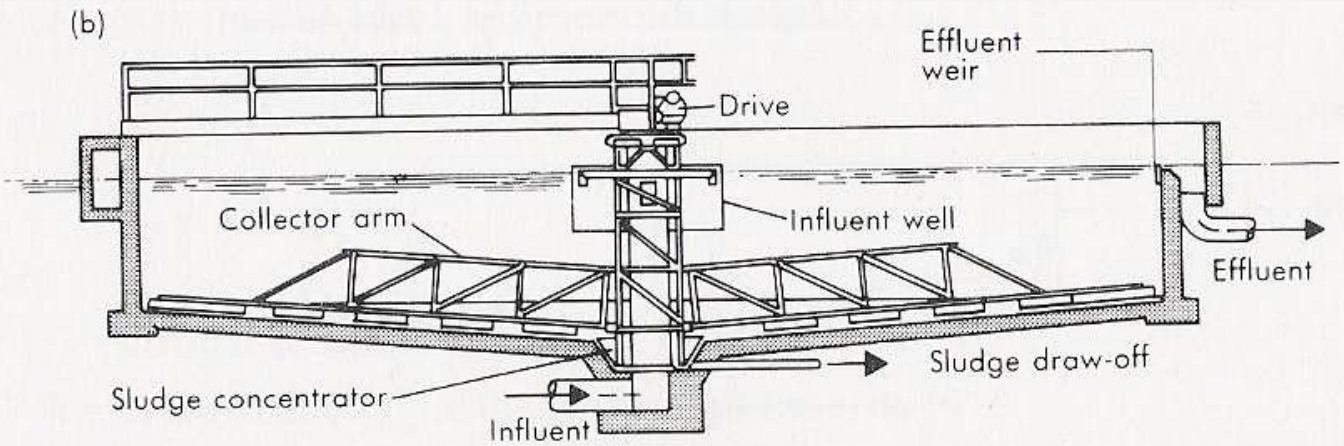

FIGURE 12.19

Typical sedimentation tanks: circular radial flow.

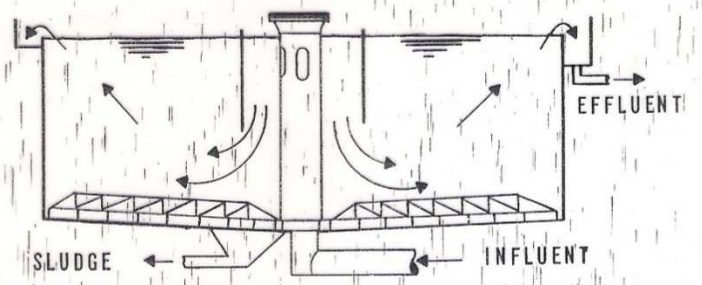

(a) CIRCULAR CENTER-FEED CLARIFIER WITH A SCRAPER SLUDGE REMOVAL SYSTEM

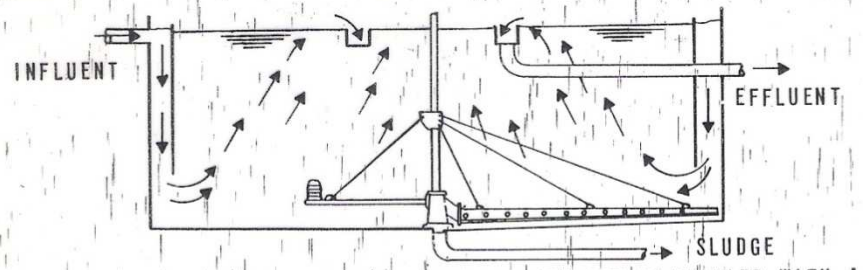

(b) CIRCULAR RIM-FEED, CENTER TAKE-OFF CLARIFIER WITH A HYDRAULIC SUCTION SLUDGE REMOVAL SYSTEM

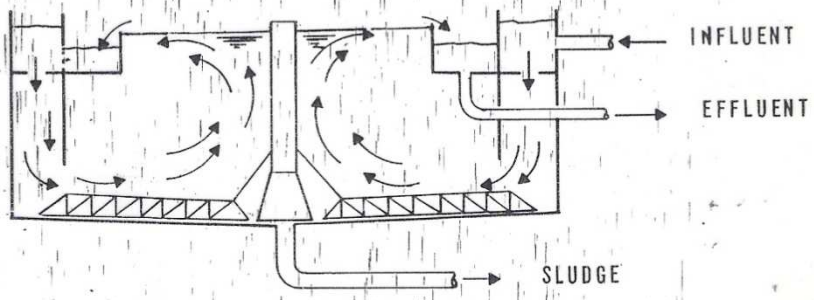

(c) CIRCULAR RIM-FEED, RIM TAKE-OFF CLARIFIER

FIGURE 7-2

TYPICAL CLARIFIER CONFIGURATIONS

Outlet Zone

weir channels are used

Checked by weir loading ($m^3/m.day$) $\frac{Q}{L}$

Large weir loading → resuspension of particles settled near to effluent launders

Effluent weirs → placed as far from the inlet as possible

to increase weir length (i.e to decrease weir loading)→ double-sided weirs can be used

Typical weirs → 90° V notch metal plates bolted onto the effluent collection through

May be placed

→ **at the opposite and of the rectangular basins**

- through the entire width of tank
- through the length of the tank

if the weir loading causes the required weir length to be greater than tank width the channel may be extended to a length of 1/3 the basin length (Reynolds)

→ **around the perimeter of center – feed circular tanks**

→ **at the center of peripheral feed circular tanks**

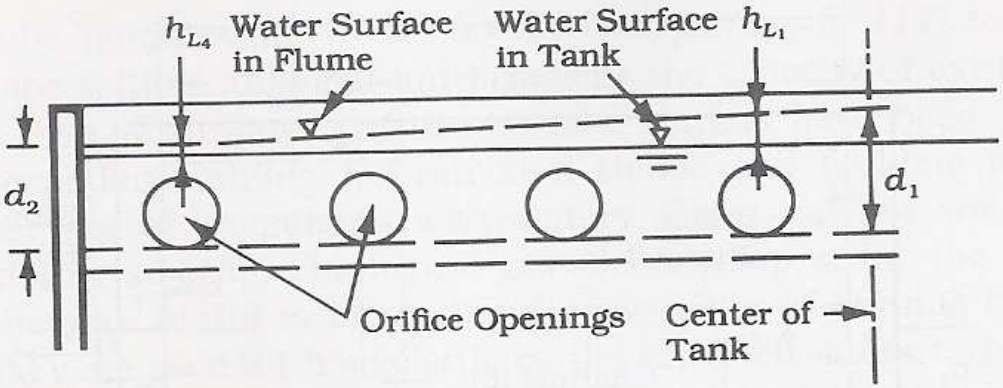

(a) Section A-A through Tank Showing Orifice Flume

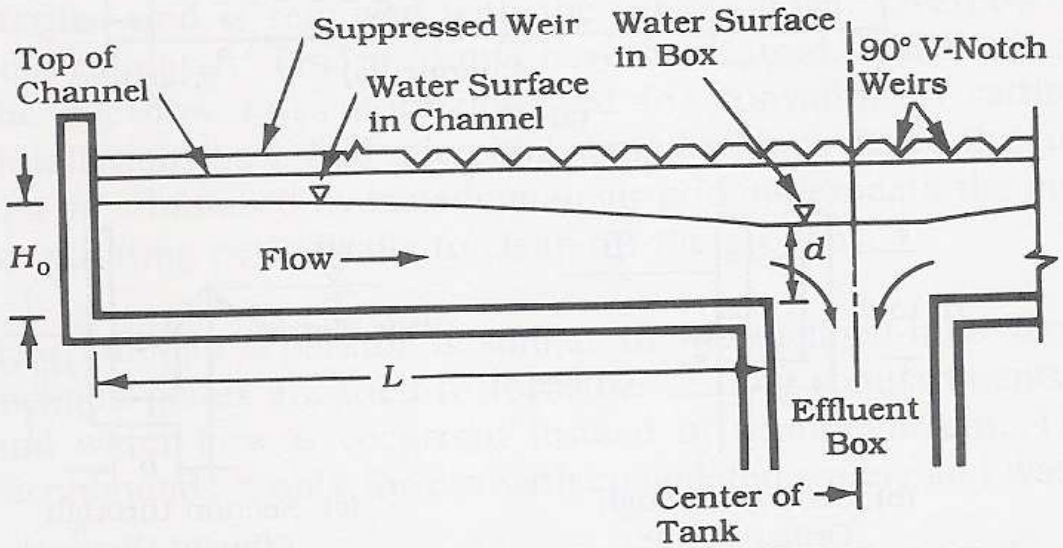

(b) Section B-B through Effluent Channel and Effluent Box

FIGURE 9.45 *Sections through Orifice Flume and Effluent Channel*

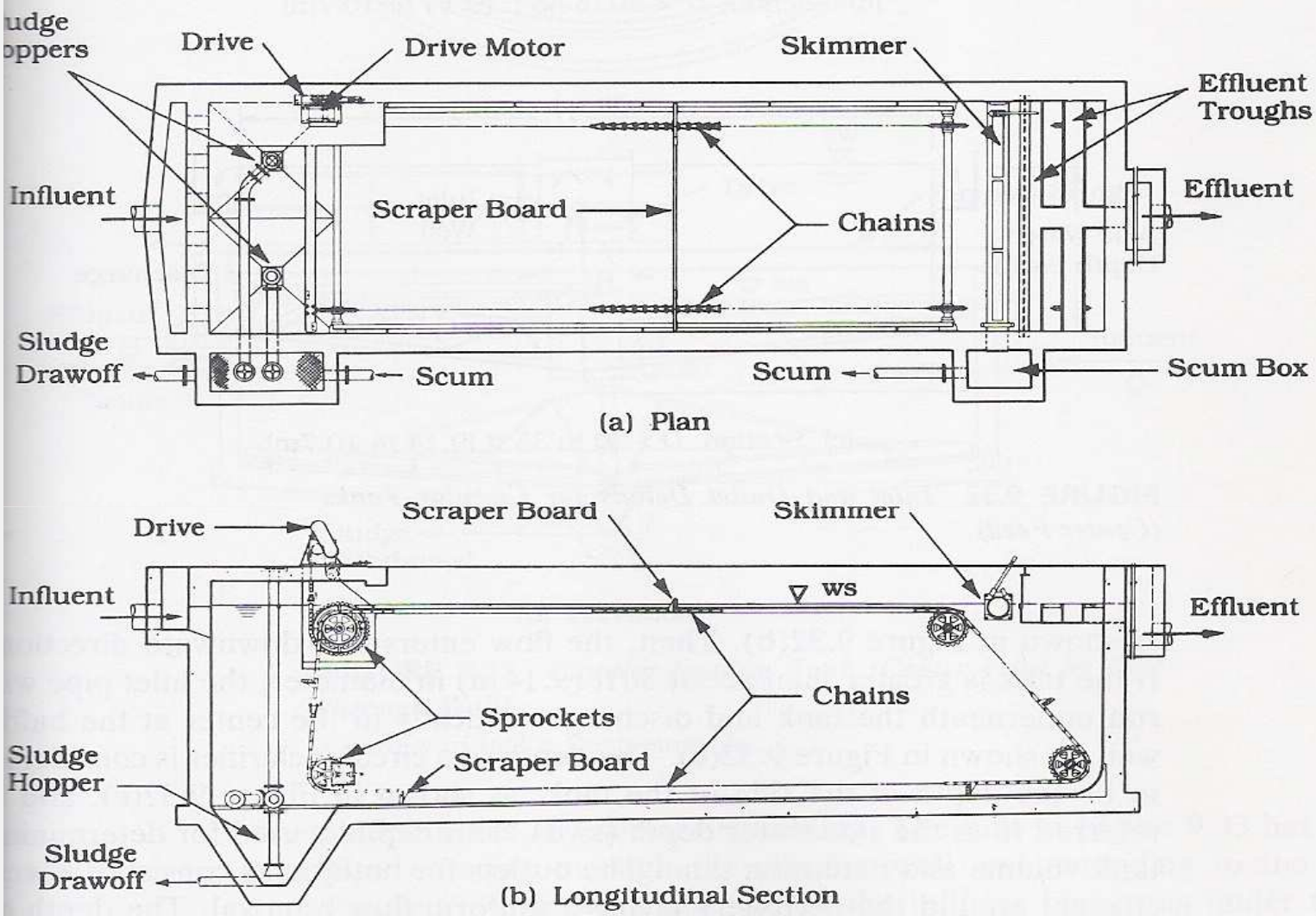

FIGURE 9.31 *Rectangular Settling Tank*

Courtesy of Walker Process Equipment, Division of McNish Corporation.

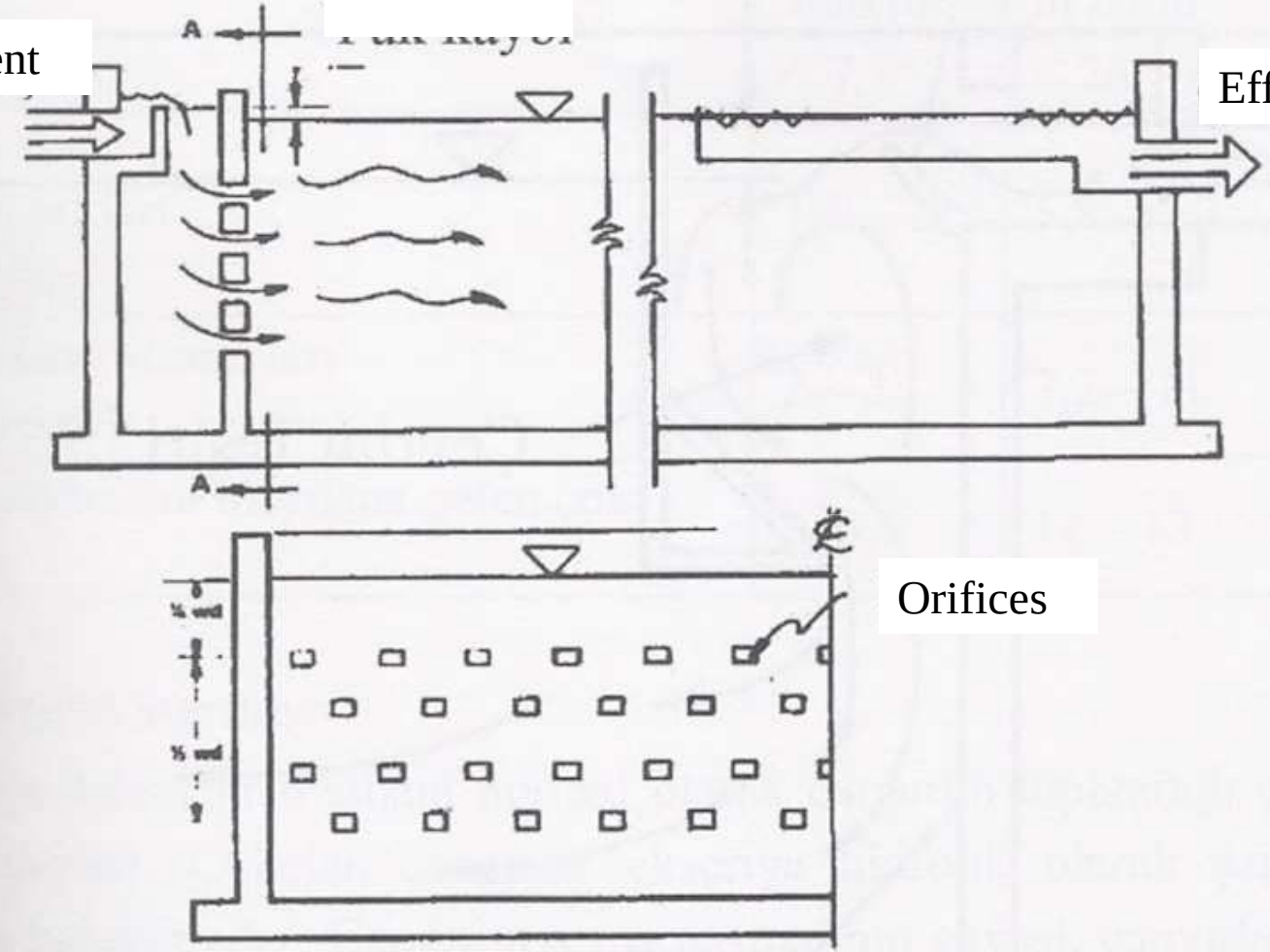
Influent
Effluent
A
A
Orifices

Sedimentation Facilities

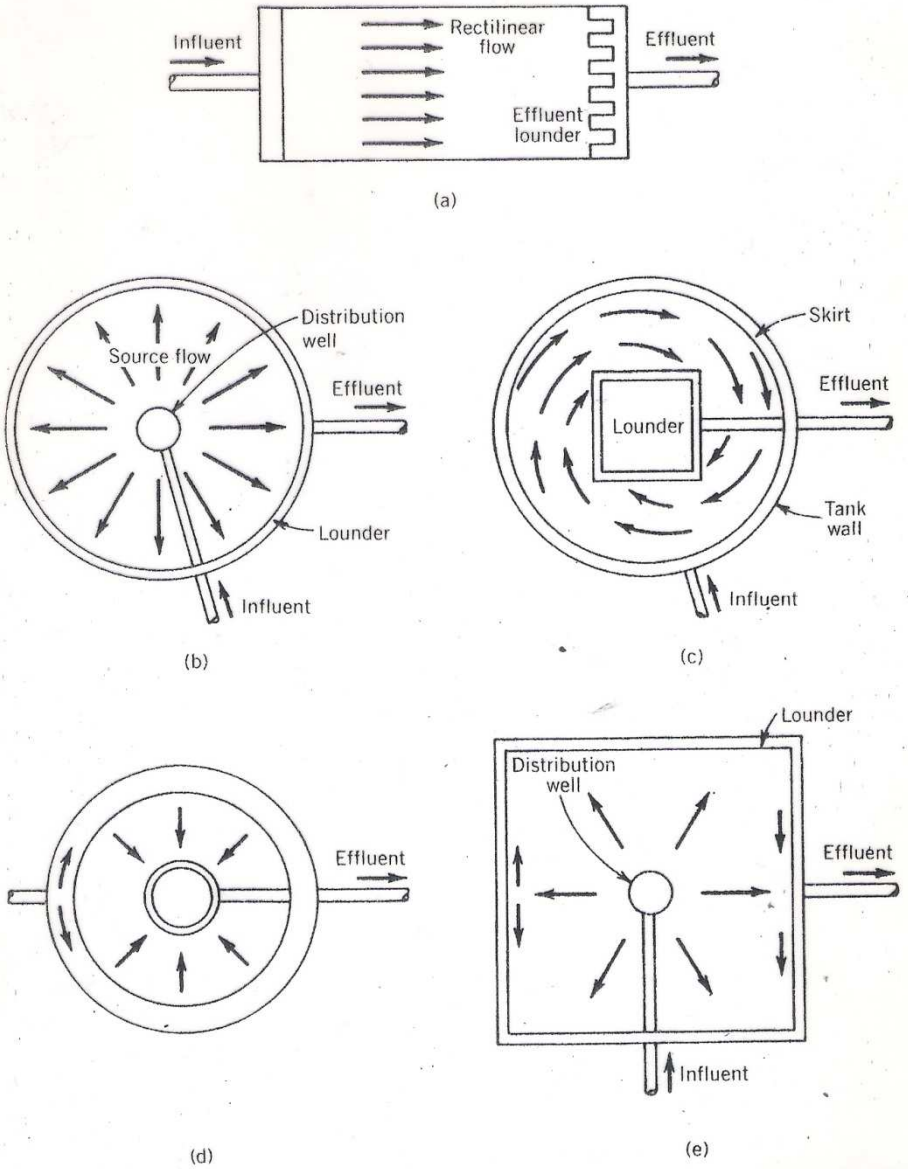

FIGURE 21-22. Flow patterns in sedimentation tanks: (a) Rectangular settling tank; (b) center feed, source flow; (c) peripheral feed, spiral flow; (d) peripheral feed, radial flow; (e) square, radial flow. (Reprinted from *Water Treatment Plant Design*. Copyright 1969, American Water Works Association, Inc.)

Figure 3.31. Inlet and Outlet Details for a Circular Tank (Peripheral Feed)

(Reynolds, 1982)

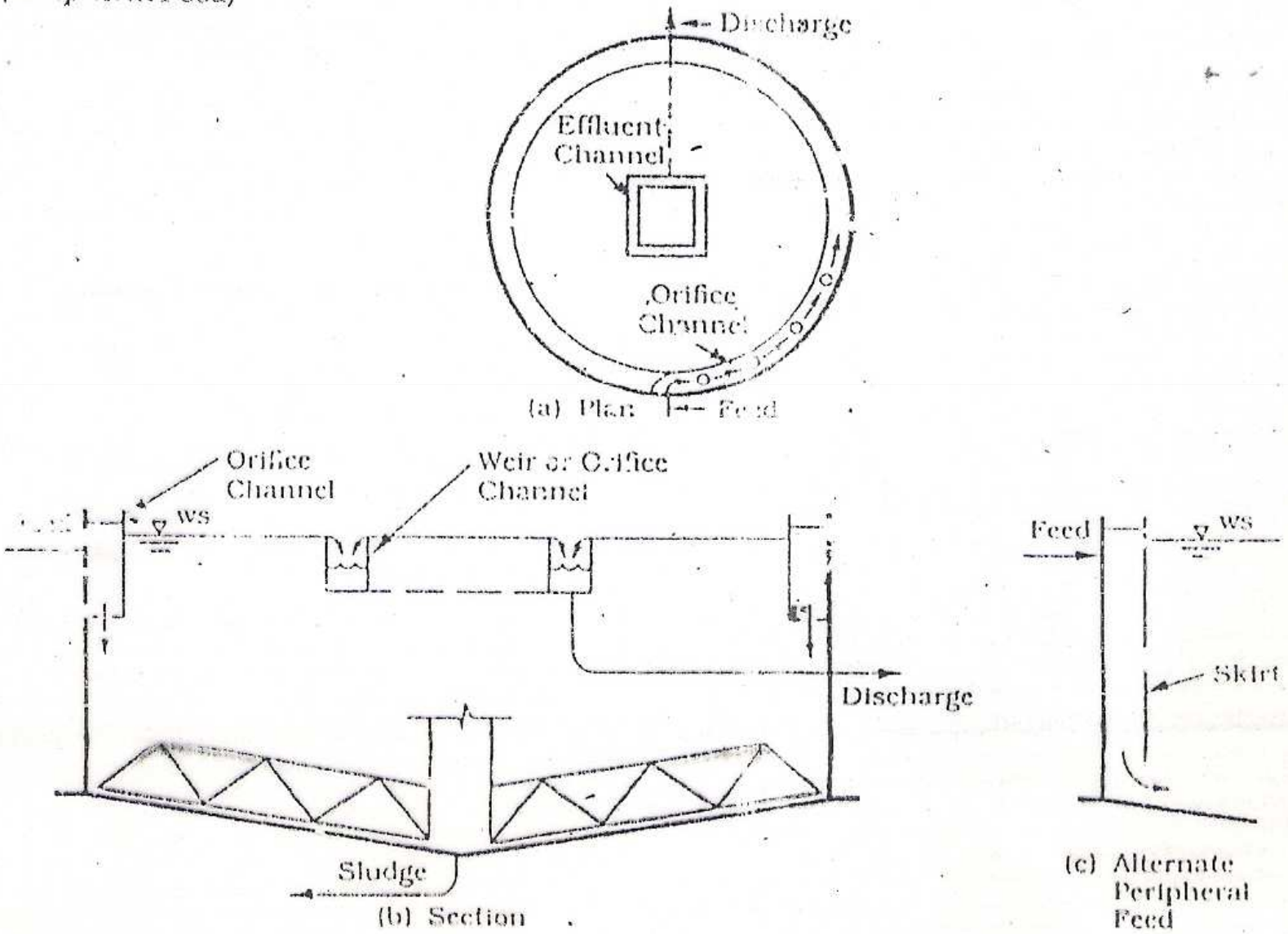

TABLE 12.4

Typical Dimensions of Sedimentation Tanks

	VALUE	
	Range	Typical
Rectangular		
Depth, m	3–5	3.5
Length, m	15–90	25–40
Width, m	3–24	6–10
Circular		
Depth, m	3–5	4.5
Diameter, m	4–60	12–45
Bottom slope, mm/m	60–160	80

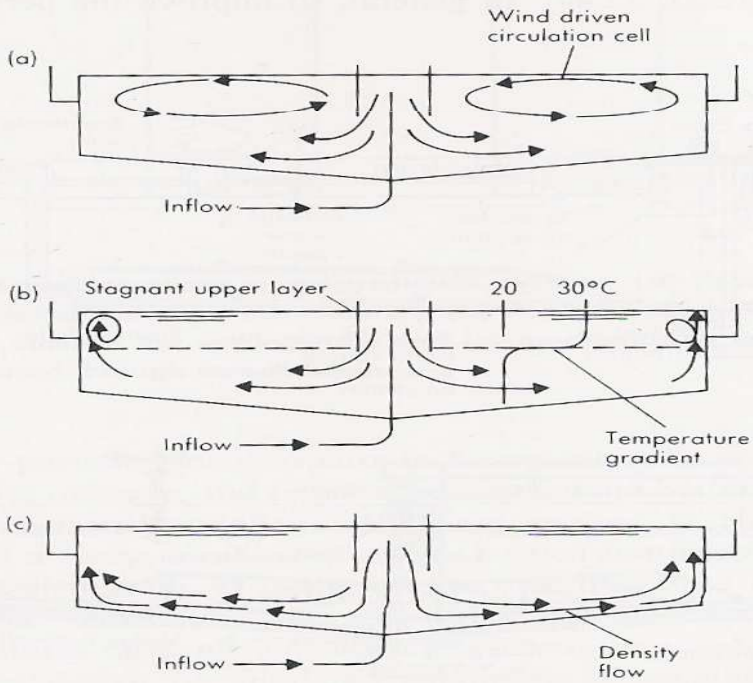

FIGURE 12.20

Nonideal conditions in circular sedimentation tanks: (a) formation of wind-driven circulation cells, (b) thermal stratification, and (c) density currents. To improve the effluent quality, the discharge weir should be placed in the dead zone.