Metal Extrusion and Drawing Processes and Equipment

Extrusion and Drawing

- Extrusion and **drawing** involve, respectively, pushing or **pulling** a material
- through a die to reduce or change its cross sectional area.
- basic types of extrusion processes,
- direct, indirect, and hydrostatic extrusion,
- the extrusion force, material and processing parameters.
- Hot and cold extrusion
- The drawing of rod, wire, and tubing
- The equipment characteristics

Extrusion and Drawing

- Typical parts made by extrusion and drawing:
- Long pieces having a wide variety of constant cross sections,
- rods, shafts, bars for machinery and automotive power-train applications,
- aluminum ladders, collapsible tubes, wire for numerous electrical and
- mechanical applications and musical instruments.
- **Alternative processes**: Machining, powder metallurgy, shape rolling, roll forming, pultrusion, and continuous casting

Extrusion

- Each billet is extruded individually; thus, extrusion is a **batch**, or **semicontinuous**, process.
- Extrusion can be economical for large as well as short production runs.
- Tool costs generally are low, particularly for producing simple, solid cross sections.
- Depending on the ductility of the material, extrusion is carried out at room or elevated temperatures.
- Extrusion at room temperature often is combined with forging operations, known as cold extrusion.
- numerous **important applications**, including fasteners and components for automobiles, bicycles, motorcycles, heavy machinery, and transportation equipment.

Drawing

- developed between 1000 and 1500 A.D.,
- solid rod, wire, or tubing is reduced or changed in shape by pulling it through a die.
- Drawn rods are used for shafts, **spindles**, and small pistons
- raw material for fasteners (such as rivets, bolts, and screws).
- various profiles can be drawn.
- The term drawing also is used to refer to making **cup-shaped parts** by sheet-metal-forming operations.

3 basic types of extrusion:

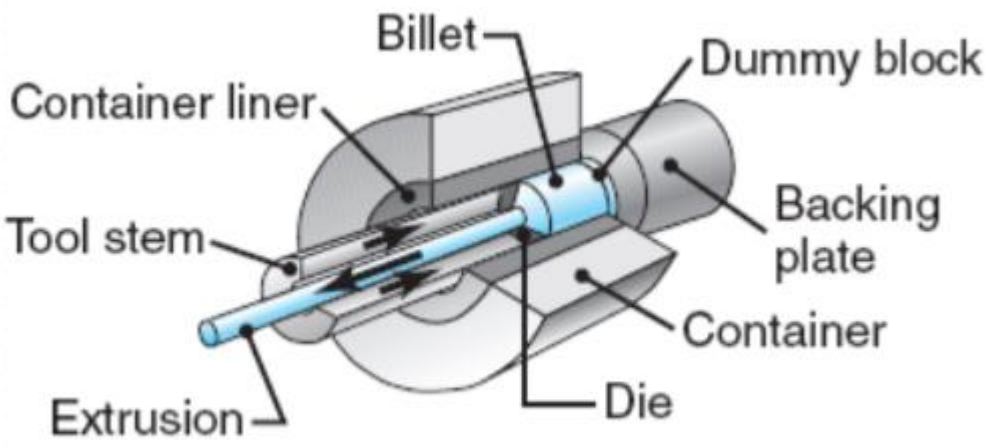

(a) indirect

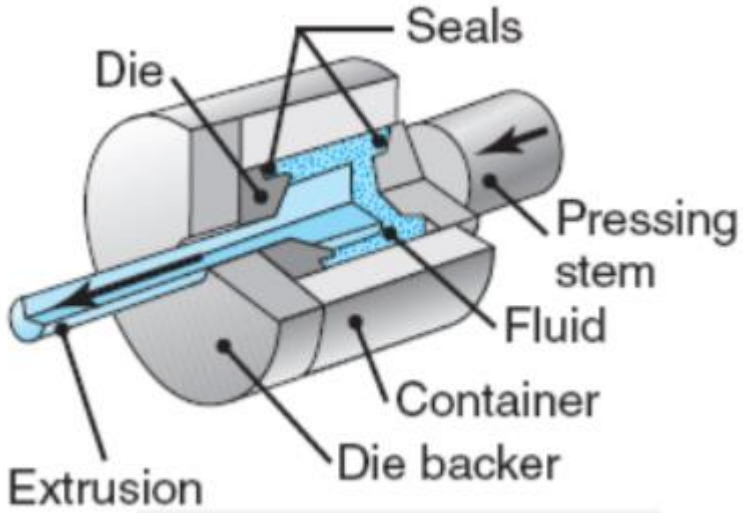

(b) hydrostatic

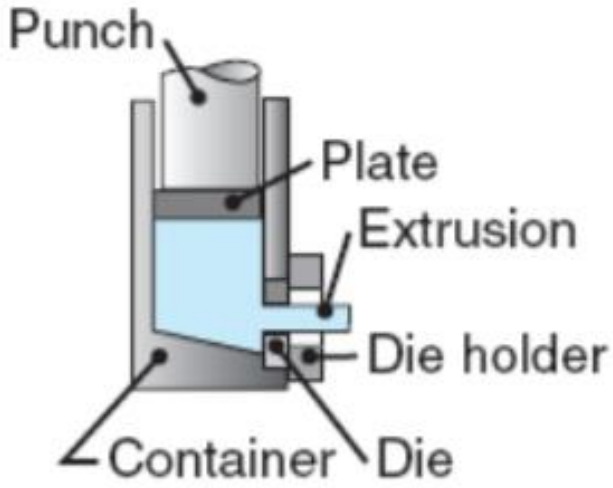

(c) lateral

Casting and Extrusion Process

https://www.youtube.com/watch?v=baM5hNnBcT8

The Extrusion Process

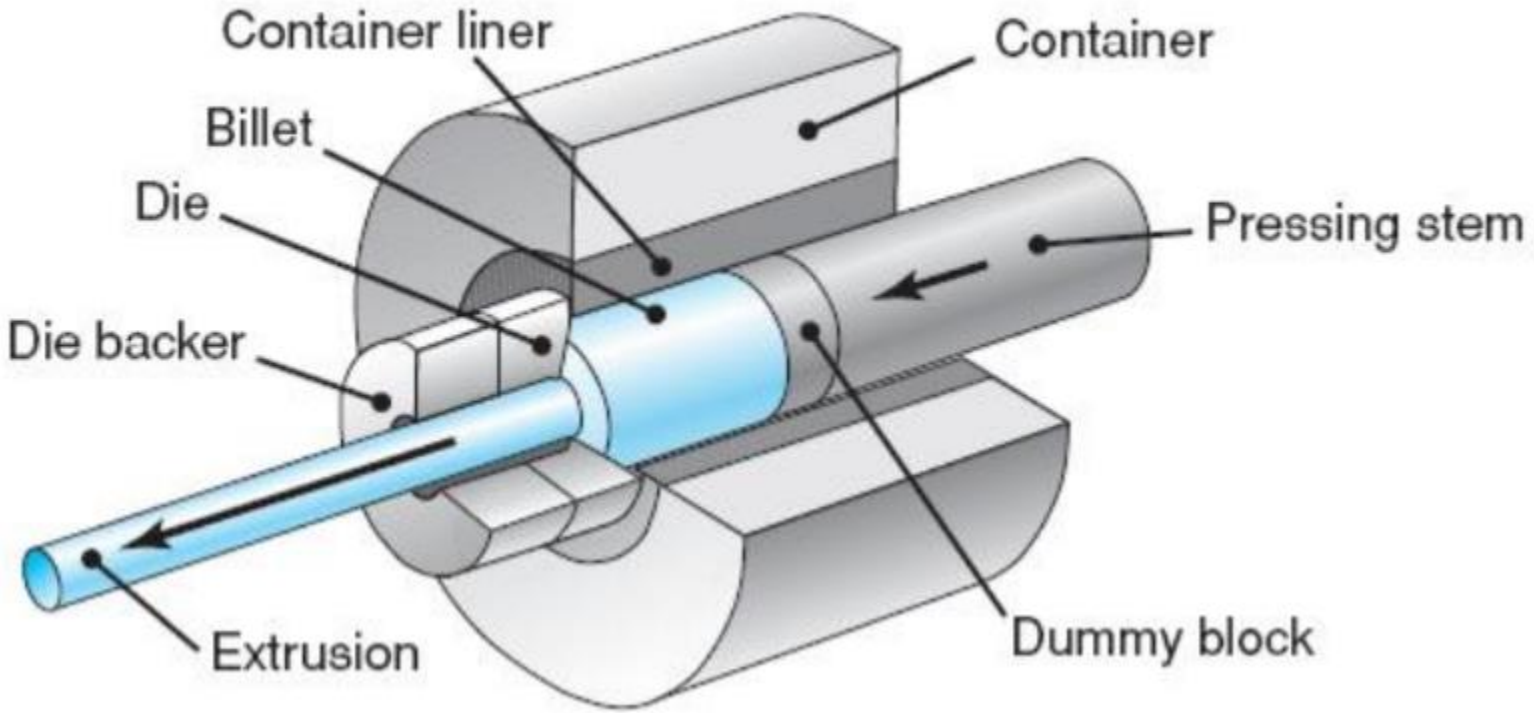

a cylindrical **billet** is forced through a **die**
similar to squeezing toothpaste from a tube or extruding.

Geometric variables in extrusion

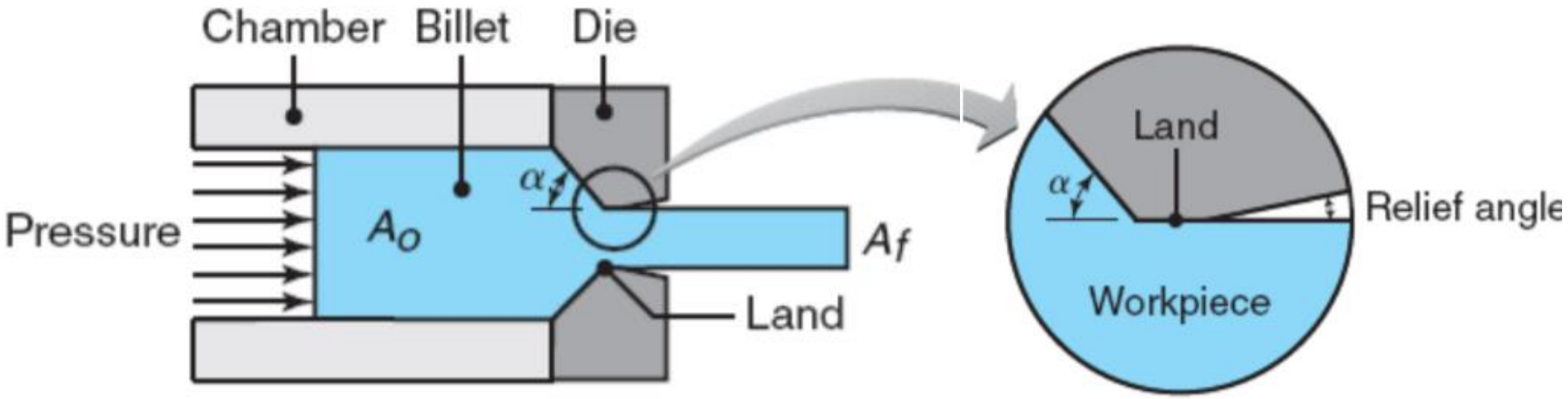

Process variables in direct extrusion. The die angle, reduction in cross section, extrusion speed, billet temperature, and lubrication all affect the extrusion pressure.

Hot Extrusion Force

The force required for extrusion depends on ;

(a) *T*he strength of the billet material,

(b) Extrusion ratio

(c) The friction between billet and the chamber and the die surface

(d) Process variables such as the temperature of the billet and the speed of extrusion

The *extrusion force*, F, can be estimated from the formula

$$F = A_o k \ln\left(\frac{A_o}{A_f}\right),$$

A_o and A_f are the billet and extruded product areas

k is the **extrusion constant** determined experimentally

k value is a measure of the strength of the material and the frictional conditions.

k values for a range of extrusion temperatures.

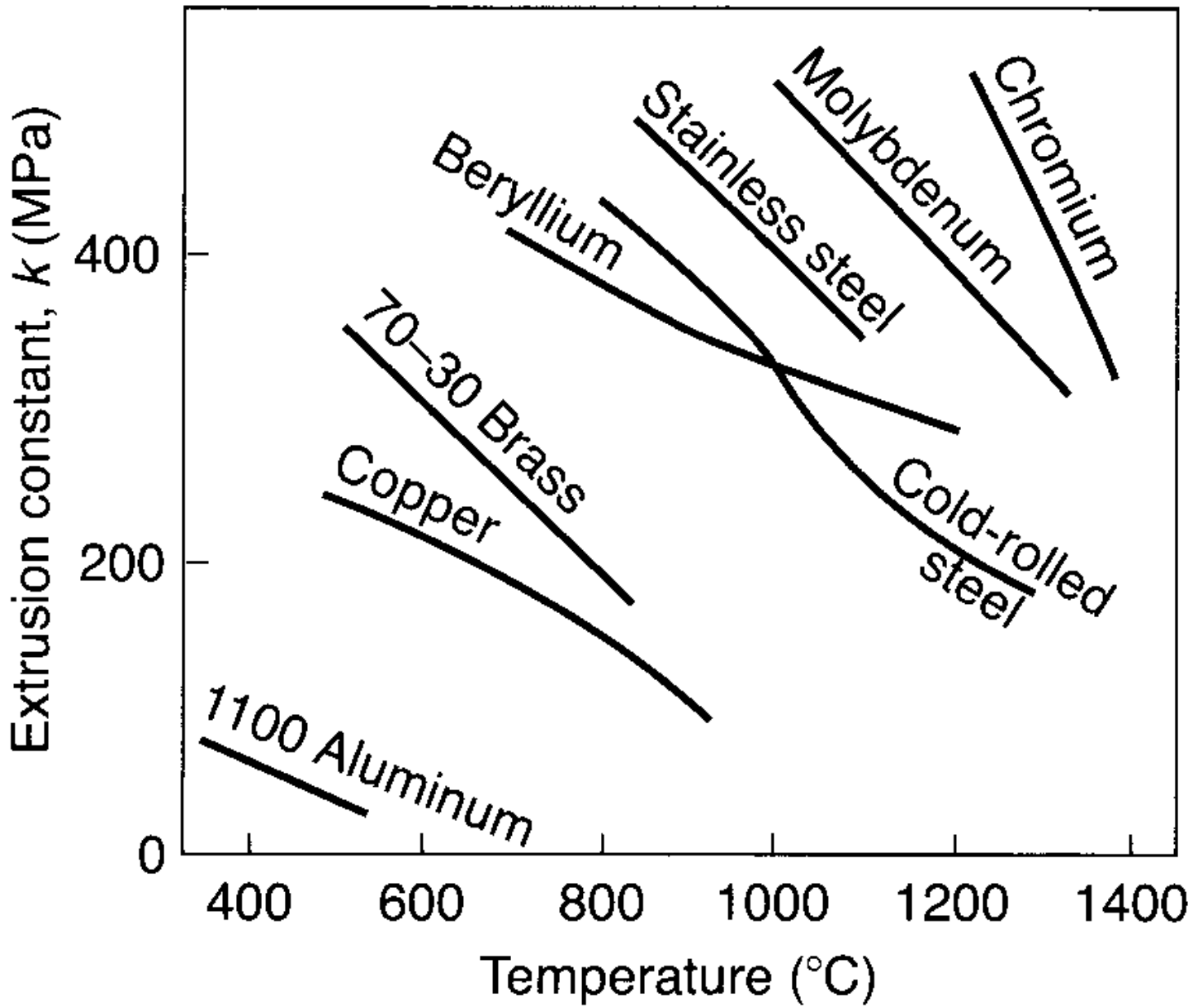

Calculation of Force in Hot Extrusion

A round billet made of 70–30 brass is extruded at a temperature of 675°C. The billet diameter is 125 mm, and the diameter of the extrusion is 50 mm. Calculate the extrusion force required.

The *extrusion force*, F, can be estimated from the formula

$$F = A_o k \ln\left(\frac{A_o}{A_f}\right),$$

the extrusion constant, k,
70–30 brass, $k = 250$ MPa

$$F = \frac{\pi(125)^2}{4}(250)\ln\left[\frac{\pi(125)^2}{\pi(50)^2}\right]$$

$$= 5.6 \text{ MN}.$$

Process Parameters

- extrusion ratios, R, usually range 10 to 100.
  a) may be higher for special applications (400 for softer nonferrous metals) or
  b) lower for less ductile materials, although the ratio usually has to be at least 4 to deform the material plastically through the bulk of the workpiece.
- Extruded products **usually are less than 7.5 m long** because of the difficulty in handling greater lengths, but they can be as long as 30 m.
- Ram speeds range up to 0.5 m/s. Generally, lower speeds are preferred for aluminum, magnesium, and copper, higher speeds for steels, titanium, and refractory alloys.
- Dimensional tolerances in extrusion are usually in the range from ±0.25 to 2.5 mm, and they increase with increasing cross section.

Process Parameters

- Most extruded products-particularly those with small cross sections require **straightening** and **twisting**. This is accomplished typically by stretching and twisting the extruded product, usually in a hydraulic stretcher equipped with jaws.
- The presence of a die angle causes a small portion of the end of the billet to remain in the chamber after the operation has been completed. This portion (called scrap or the butt end) subsequently is removed by cutting off the extrusion at the die exit and removing the scrap from the chamber. Alternatively, another billet or a graphite block may be placed in the chamber to extrude the piece remaining from the previous extrusion.

1- Hot Extrusion

TABLE 15.1

Typical Extrusion Temperature Ranges for Various Metals and Alloys

	°C
Lead	200–250
Aluminum and its alloys	375–475
Copper and its alloys	650–975
Steels	875–1300
Refractory alloys	975–2200

Die Design

Typical extrusion–die configurations:

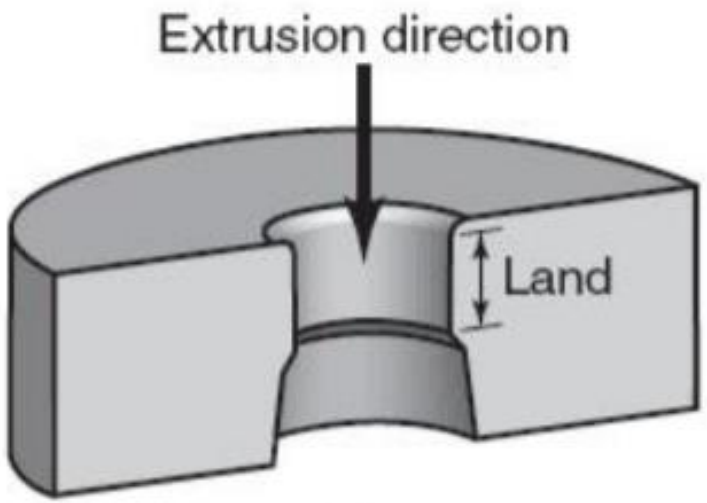

(a) die for nonferrous metals;

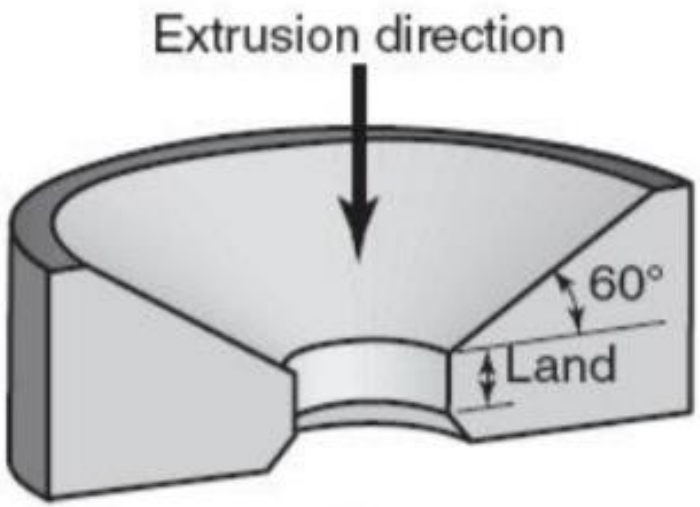

(b) die for ferrous metals;

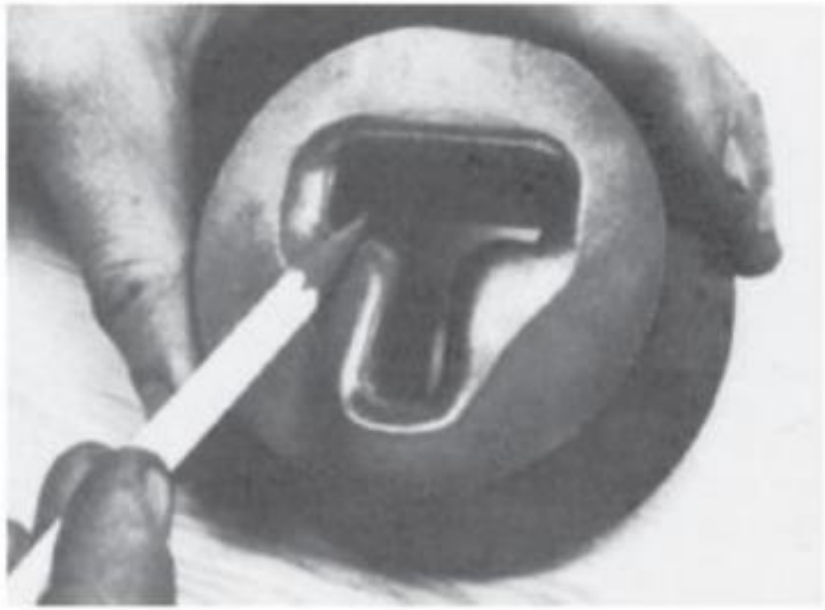

(c) die for a T-shaped extrusion made of hot-work die steel and used with molten glass as a lubricant.

Die Design

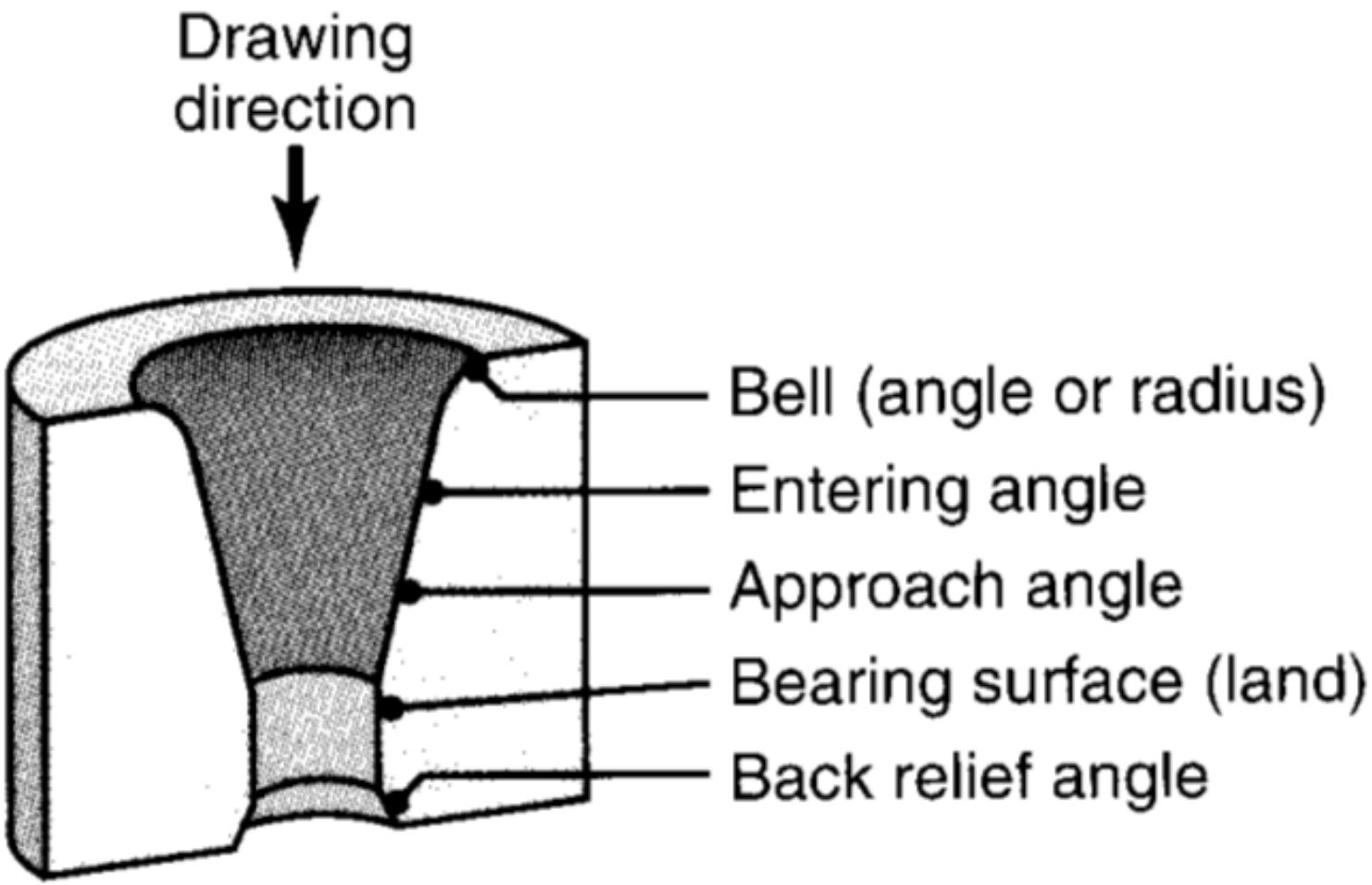

Terminology pertaining to a typical die used for drawing a round rod or wire.

Die Design

Extrusion of a seamless tube

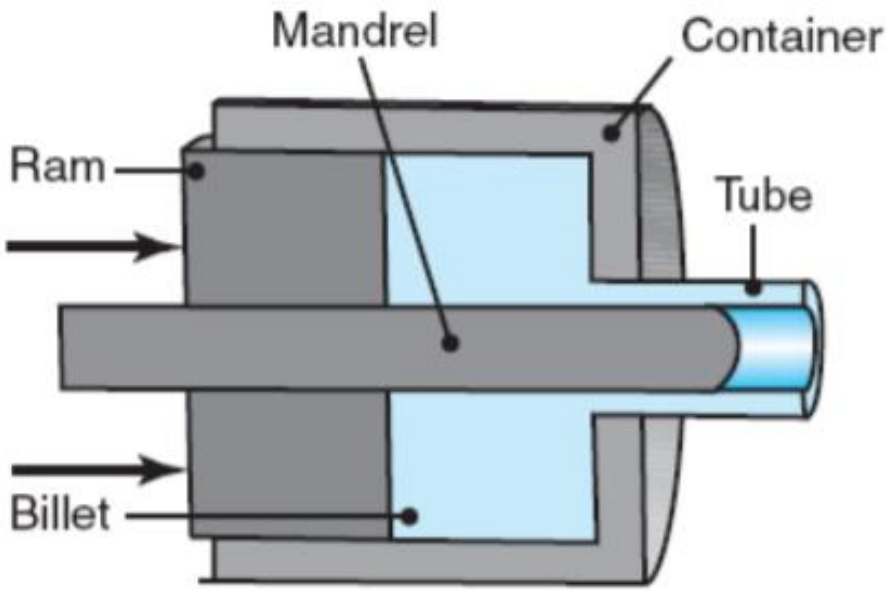

(a) using an internal mandrel that moves independently of the ram.

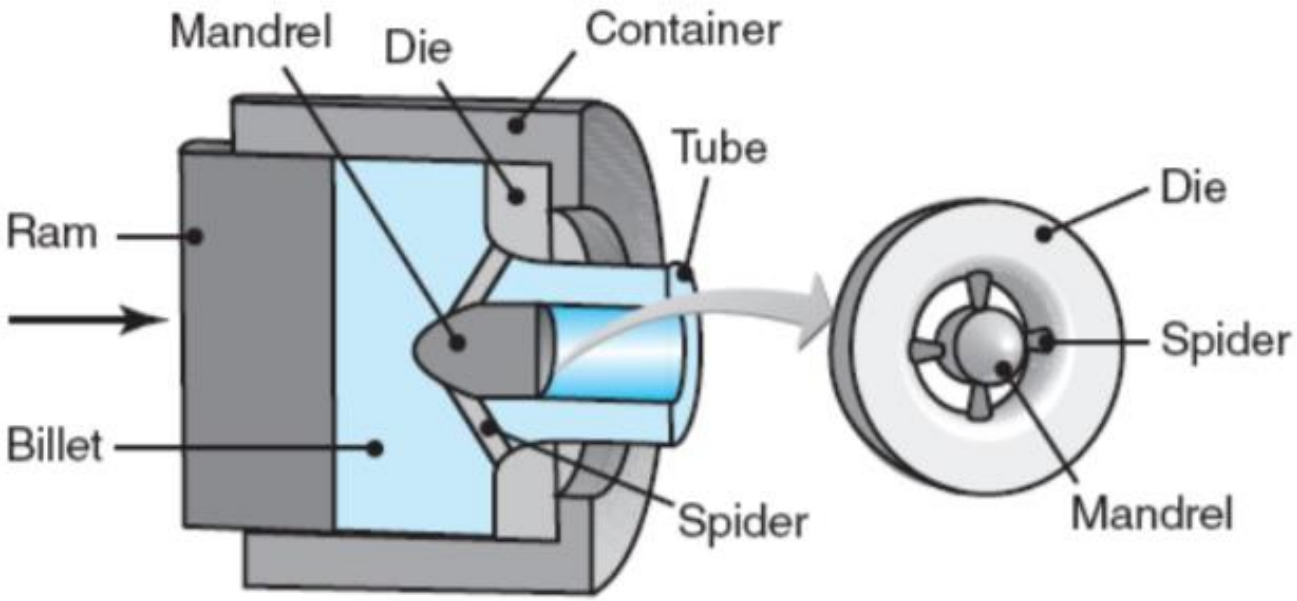

(b) using a spider die to produce seamless tubing.

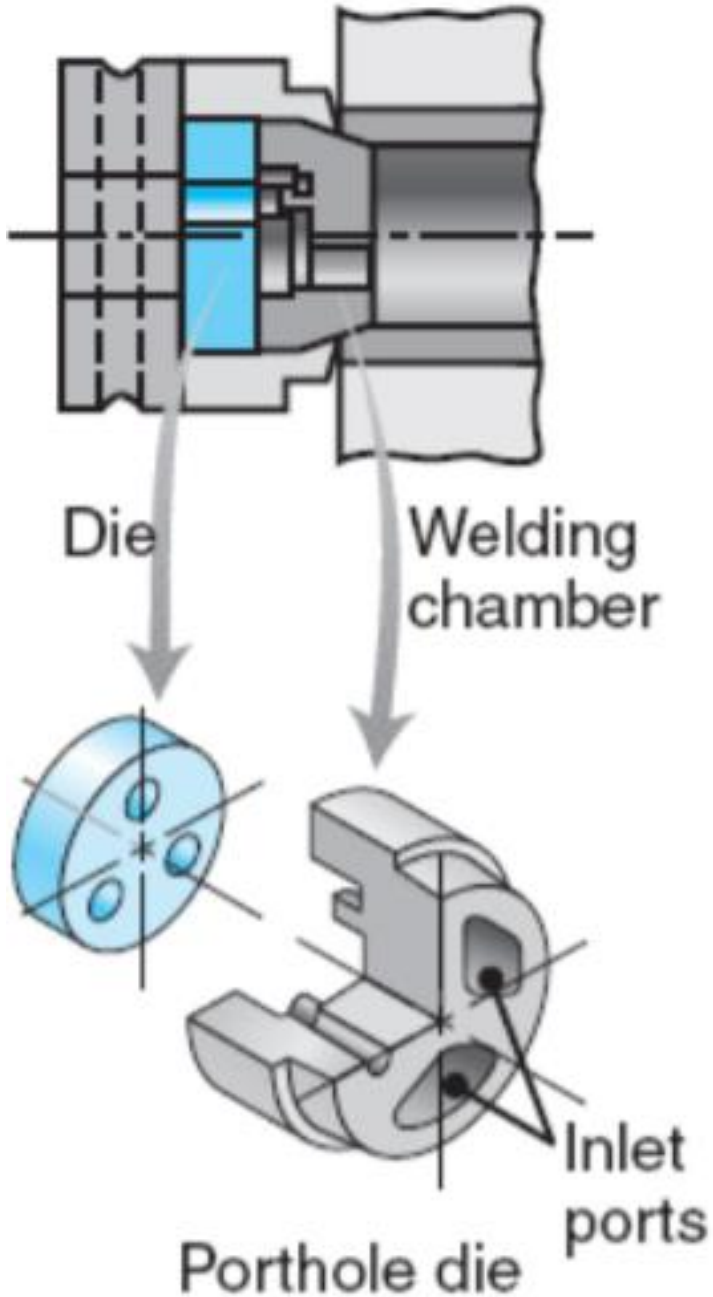
Die
Welding chamber
Inlet ports
Porthole die

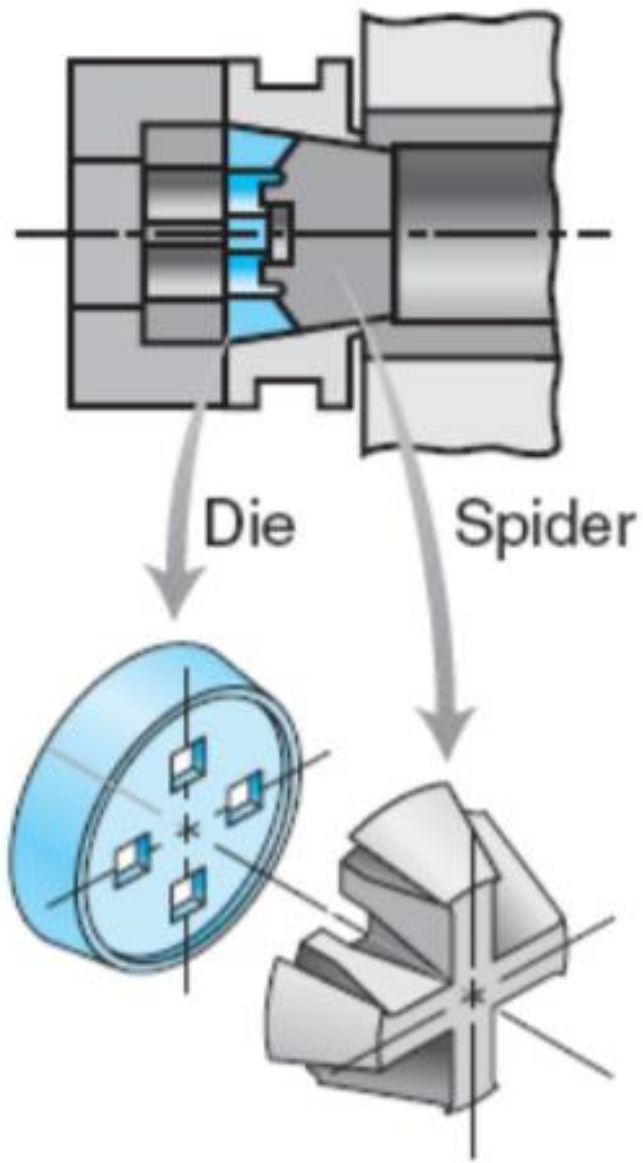
Die
Spider
Spider die

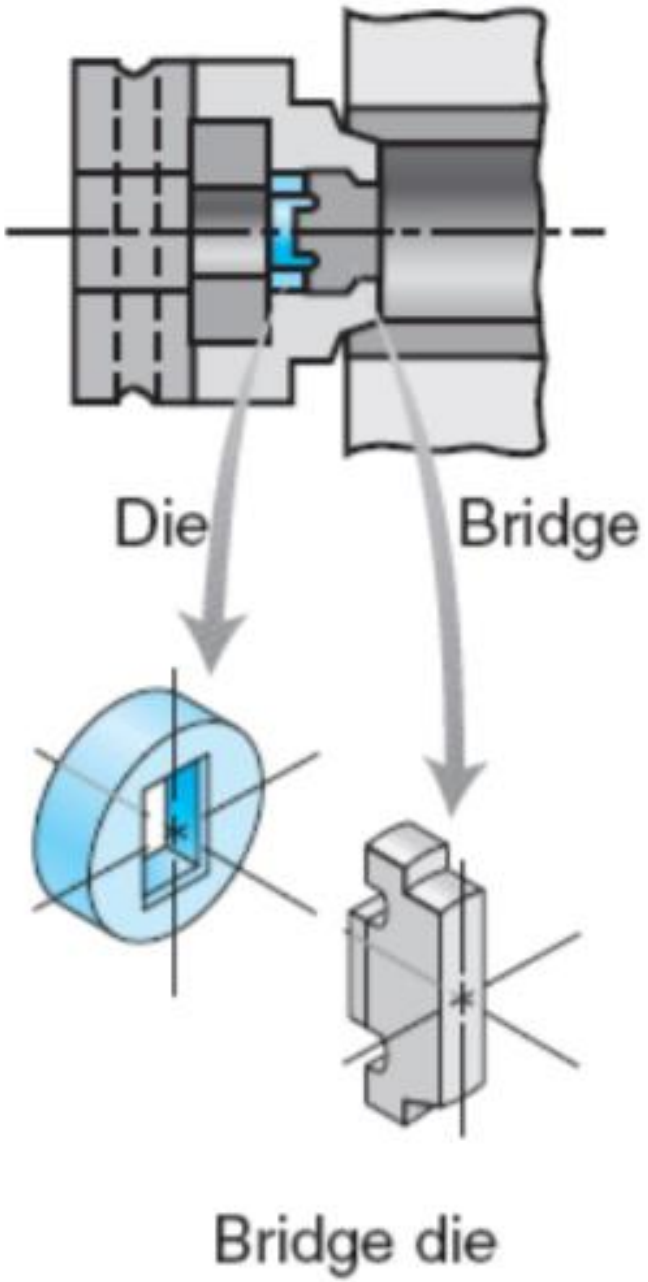
Die
Bridge
Bridge die

Die Design

Guidelines for proper die design in extrusion:

1. Symmetry of cross section
2. Avoidance of sharp corners
3. Avoidance of changes in die dimensions

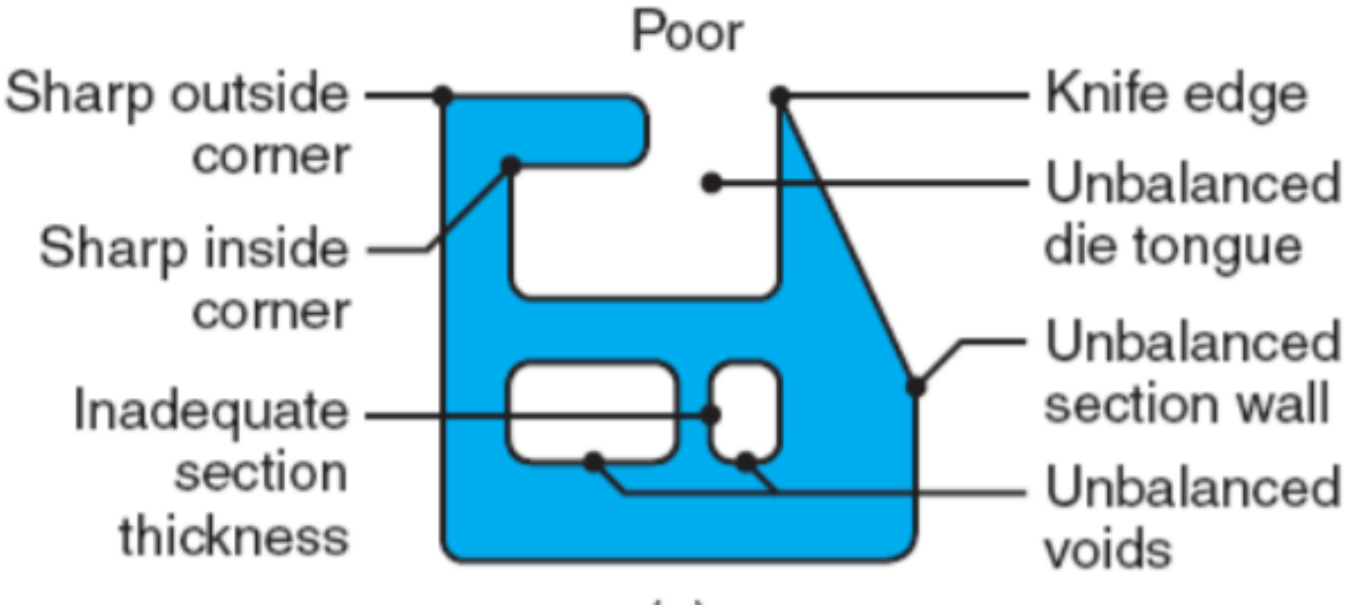

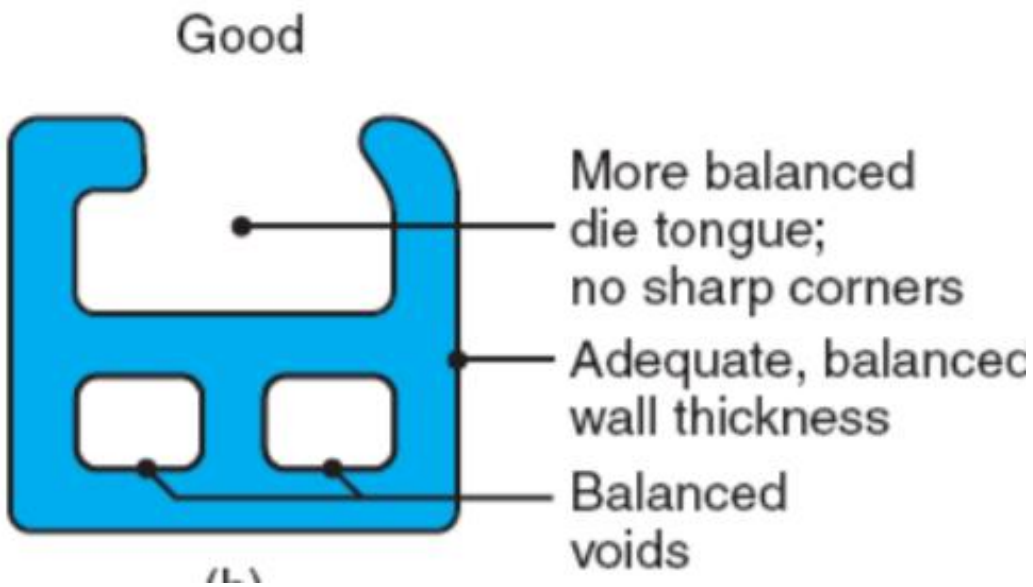

Die Materials

- Die materials for hot extrusion usually are **hot-worked die steels**.
- Coatings (such as partially **stabilized zirconia**) may be applied to the dies to extend their life.
- Partially stabilized zirconia dies also are used for hot extrusion of tubes and rods.
- not suitable for making dies for extruding **complex shapes**,

Die Material

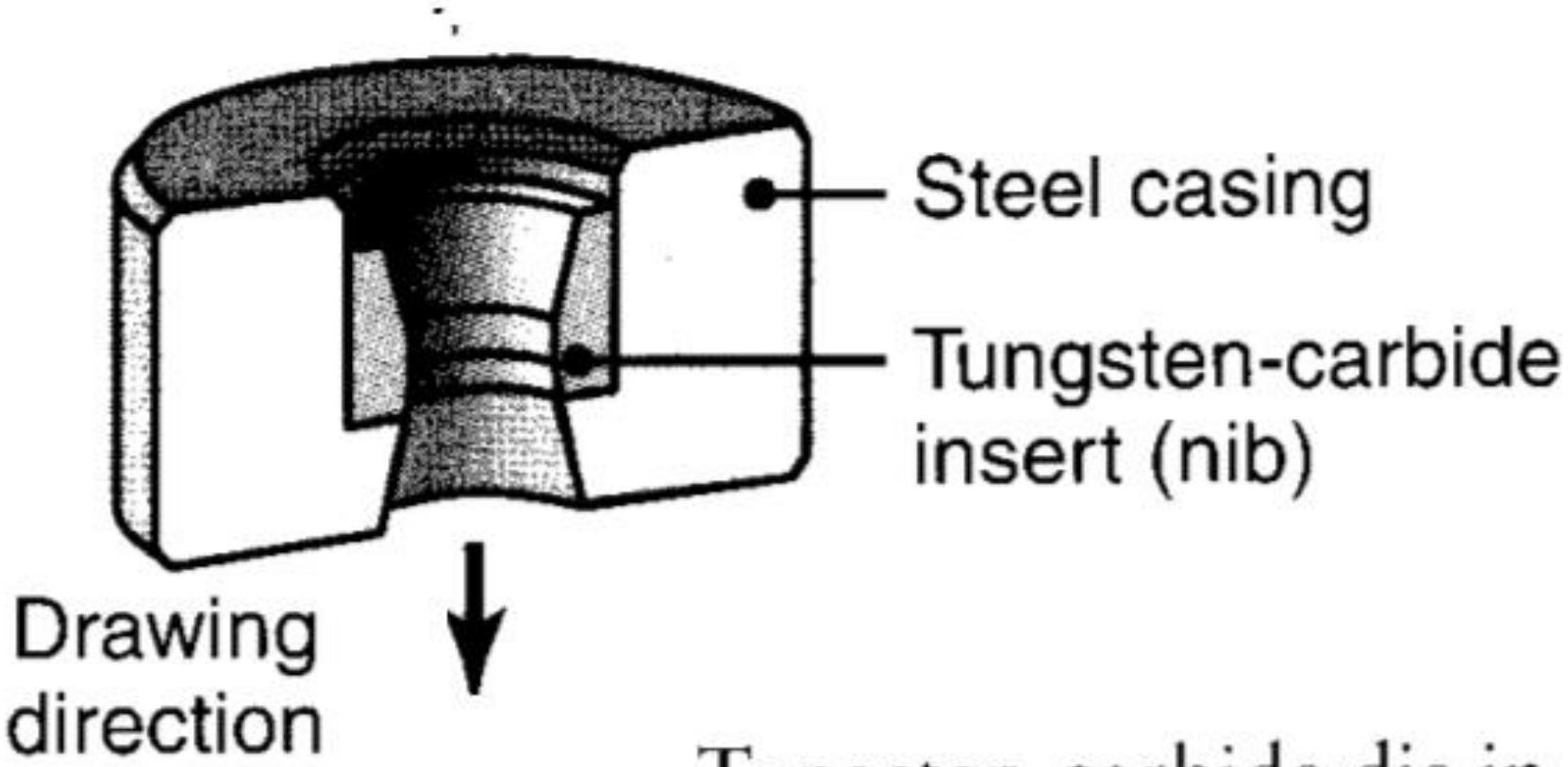

Tungsten-carbide die insert in a steel casing. Diamond dies used in drawing thin wire are encased in a similar manner.

Lubrication

Lubrication is important in hot extrusion because of its effects on

(a) material flow during extrusion,

(b) surface finish and integrity,

(c) product quality, and

(d) extrusion forces.

- Glass is an excellent lubricant for steels, stainless steels, and high-temperature metals and alloys.
- developed in the 1940's and known as the Séjournet process, a circular **glass or fiberglass pad** is placed in the chamber at the die entrance.
- a thin layer of glass begins to **melt and acts as a lubricant** at the die interface as the extrusion progresses.
- Before the billet is placed in the chamber, its cylindrical surface is coated with a layer of **powdered glass** to develop a thin glass lubricant layer at the billet-chamber interface.

Lubrication

- For metals that have a tendency to stick to the container and the die,
- the billet can be enclosed in a thin-walled container, or jacket,
- made of a softer and lower strength metal,
- such as copper or mild steel.
- This procedure is called jacketing or canning.
- In addition to acting as a low-friction interface, the jacket prevents contamination of the billet by the environment.
- Also, if the billet material is toxic or radioactive, the jacket prevents it from contaminating the environment.
- This technique also can be used for extruding reactive metal powders

Manufacture of Aluminum Heat Sinks

- Hot extrusion of aluminum is preferred for heat sink applications
- Tooling for hot extrusion can be produced through electrical-discharge machining

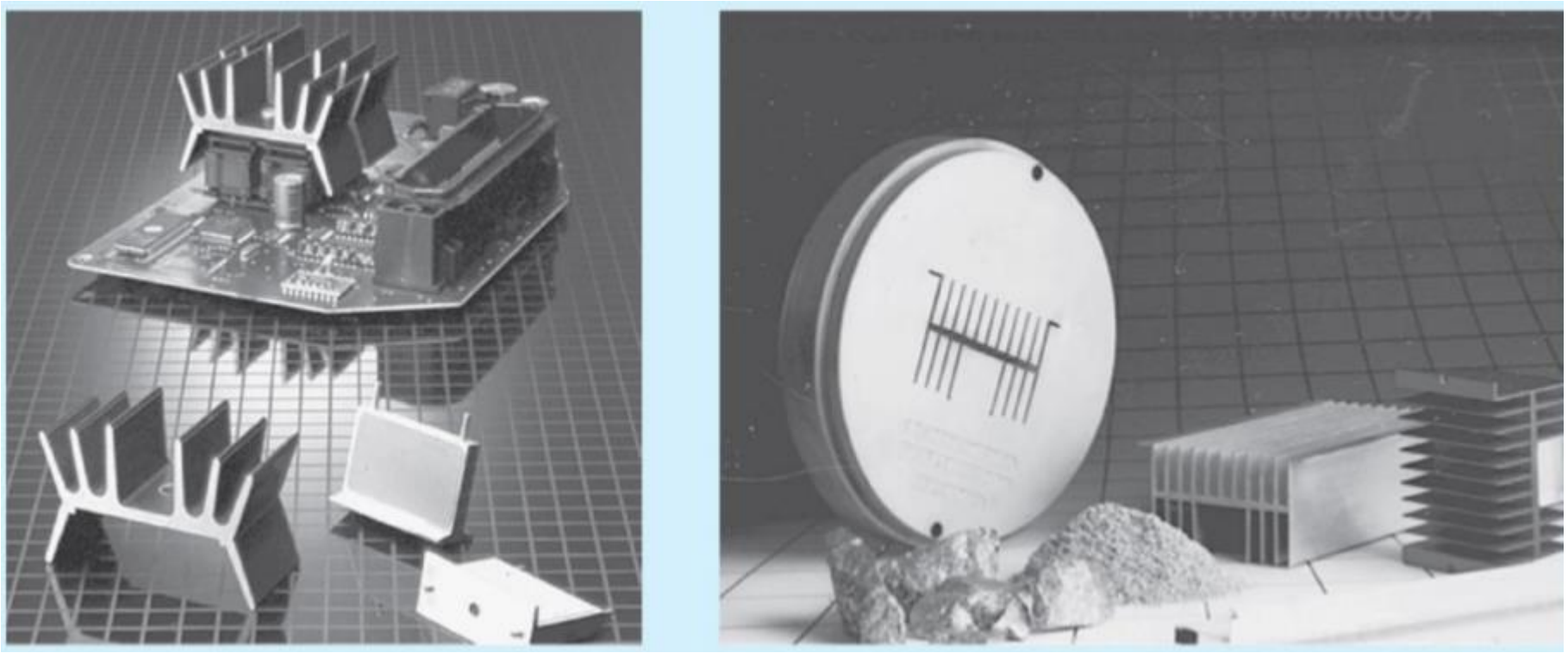

Electrical discharge machining (EDM)

https://www.youtube.com/watch?v=pBueWfzb7P0

2- Cold Extrusion

- Developed in 1940s
- Often a combination of extrusion and forging
- Used for tools and components of cars, bikes, appliances, farm equipment, motorcycles, etc
- Uses slugs less than 40 mm in diameter
- Work hardening leads to improved properties, as long as frictional heat does not cause recrystallization
- Good dimensional tolerances
- Improved surface finish due to lack of oxide film
- Less energy required (no preheating)
- Disadvantage: higher stresses on tooling
- Lubrication is important for this process

Cold Extrusion

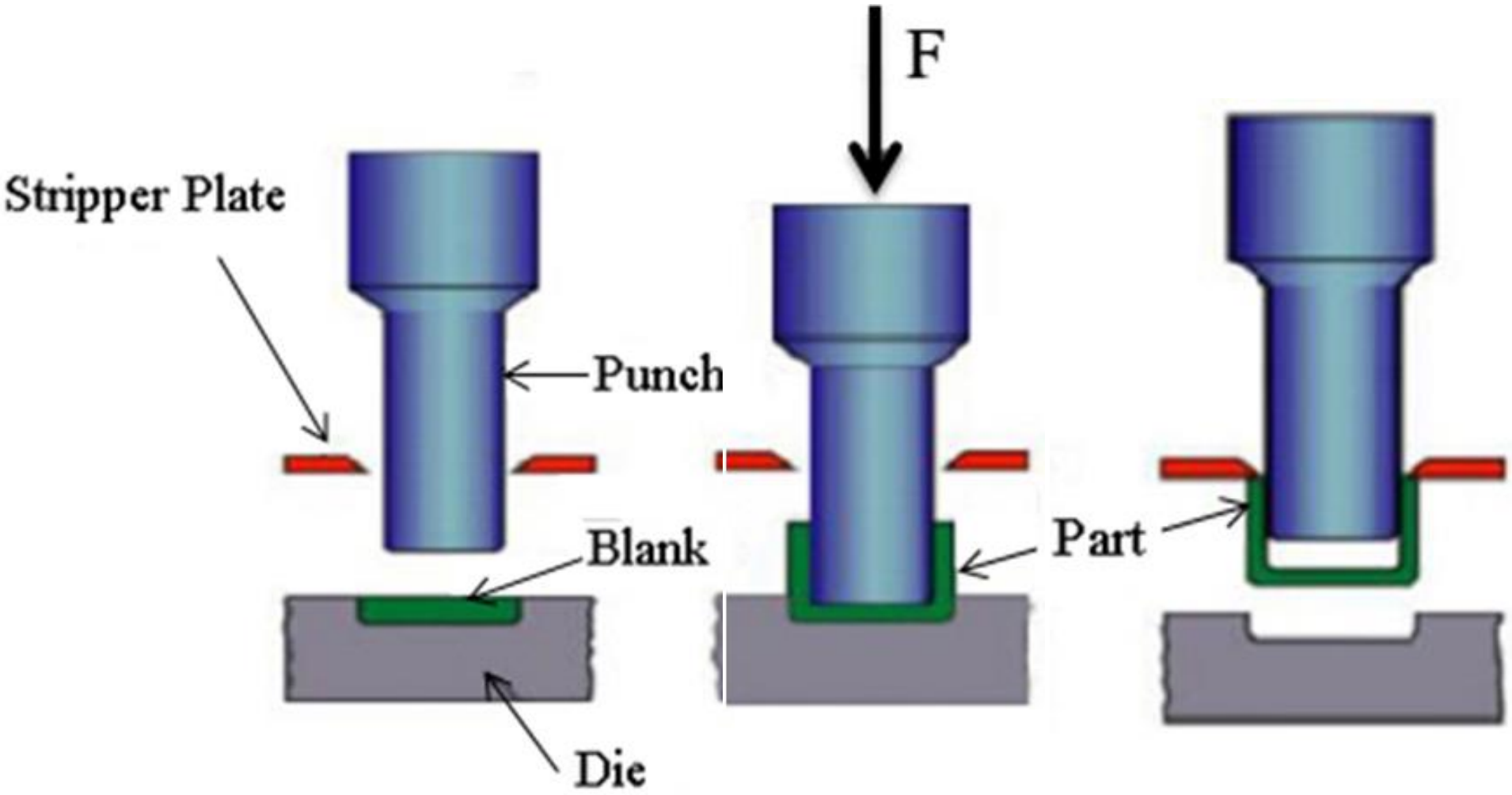

Cold Extrusion

https://www.youtube.com/watch?v=RE0gz9cD9u8

Cold Extrusion

- slugs cut from cold-finished or hot-rolled bars, Wire, or plates.
- Less than 40 mm in diameter Slugs are sheared (cropped),
- Larger diameter slugs are machined from bars into specific lengths.
- Cold-extruded parts weighing as much as 45 kg
- having lengths of up to 2 m can be made,
- although most parts weigh much less.
- Powder-metal slugs (preforms) also may be cold extruded.

Forming of Automobile Steel Wheels

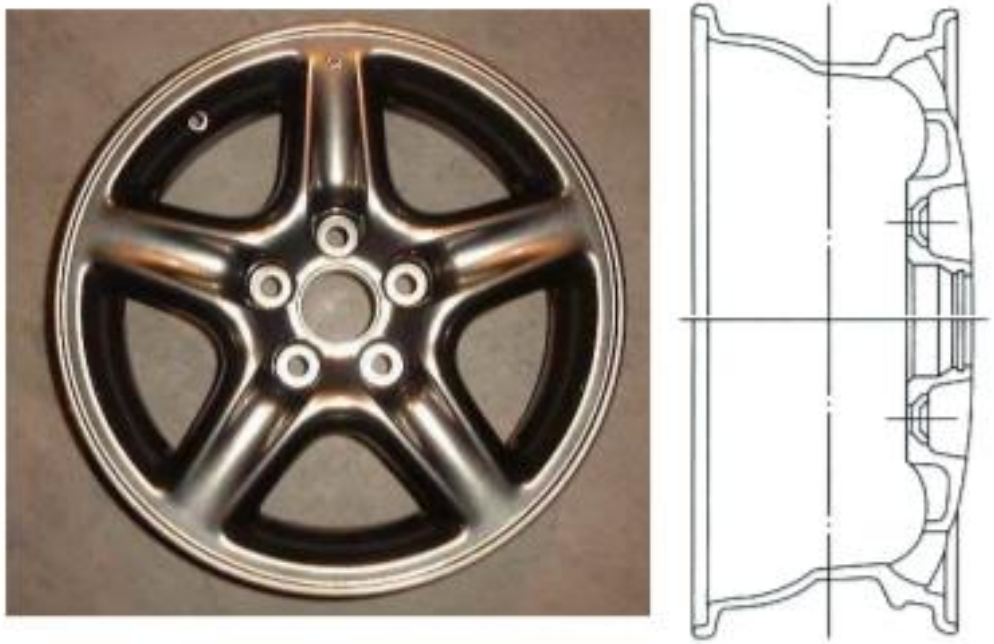

Aluminum, casting, one piece

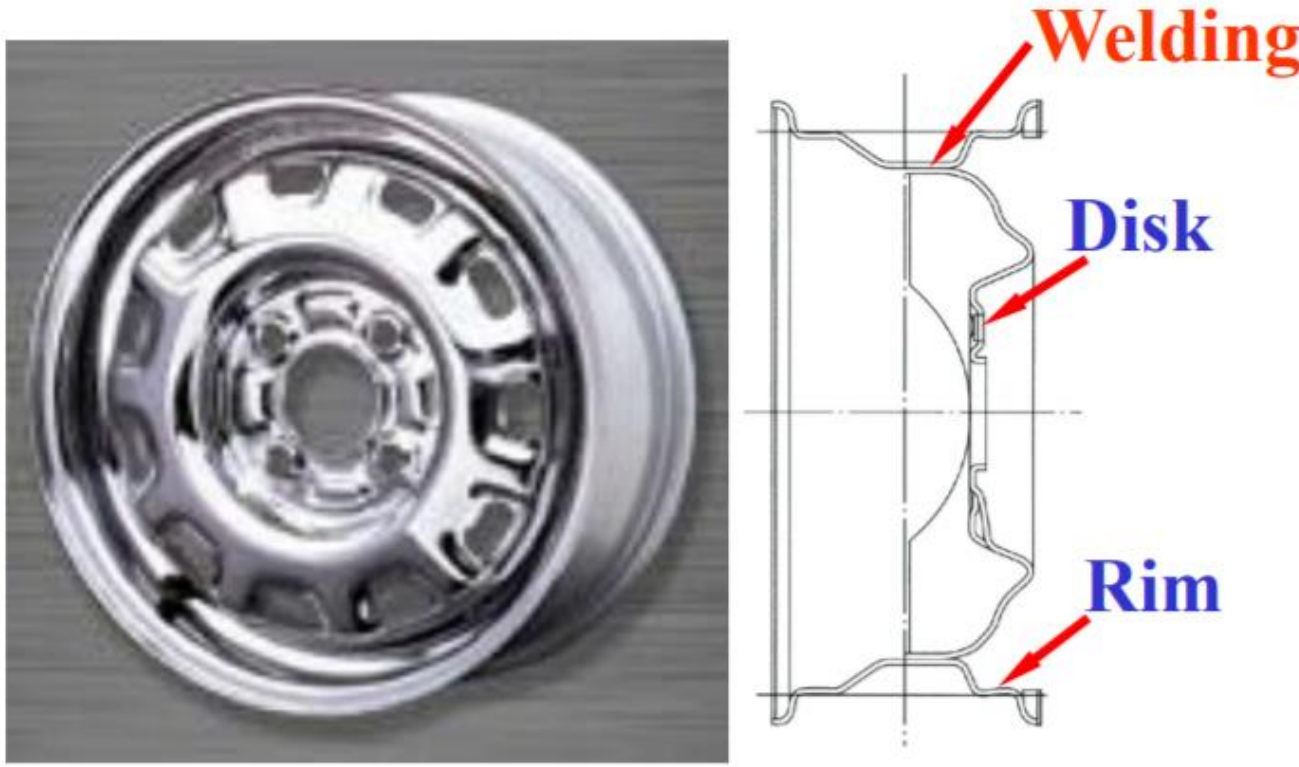

Steel, sheet metal forming, two pieces

Conventional Forming of Automobile Steel Wheels

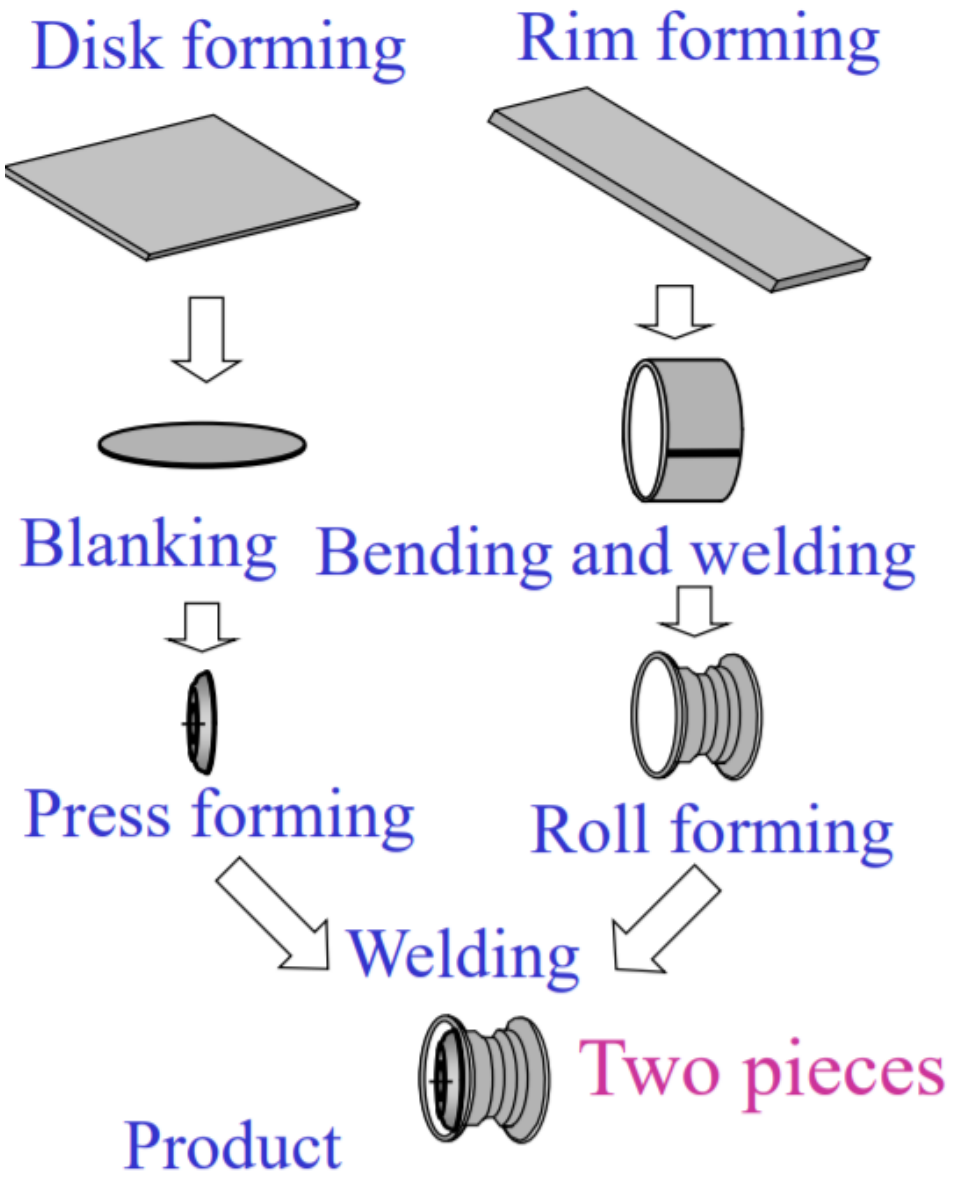

One-Piece Press Forming

1) Only multi-stage stamping
2) Omission of welding process
3) Continuous forming
4) Reduction in cost
5) Increase of wheel strength

One-Piece Press Forming

φ77mm,t_0=0.5mm

Blank

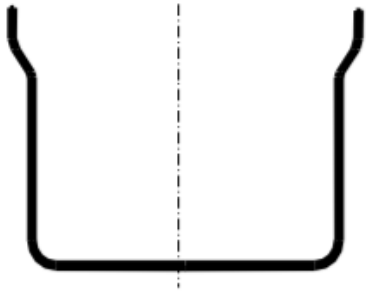

(a) Deep drawing and redrawing

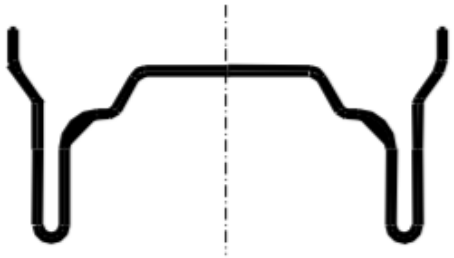

(b) Reverse drawing

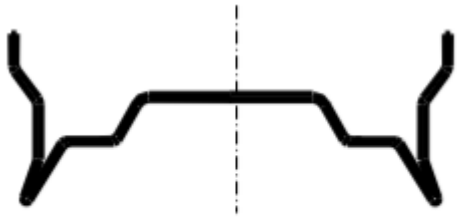

(c) 1st flaring

(d) 2nd flaring

(e) 3nd flaring

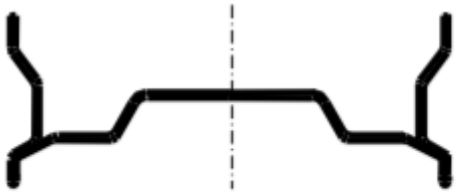

(f) Rim finishing

(g) Disk finishing

Cold Extrusion Force

The *force*, F, in cold extrusion may be estimated from the formula

$$F = 1100 A_o Y_{avg} \epsilon,$$

A_o is the cross-sectional area of the blank, Y_{avg} is the average flow stress of the metal,

ε is the true strain that the piece undergoes $\ln(A_o/A_f)$.
based on its original and final cross-sectional area

$Y_{avg} = 350$ MPa round slug 10 mm
reduced to a final diameter of 7 mm by cold extrusion.
the force would be

$$F = 1100(\pi)(10^2/4)(350)[\ln(10/7)^2] = 21.6 \text{ MN}.$$

Costs of a rod made by forging and casting

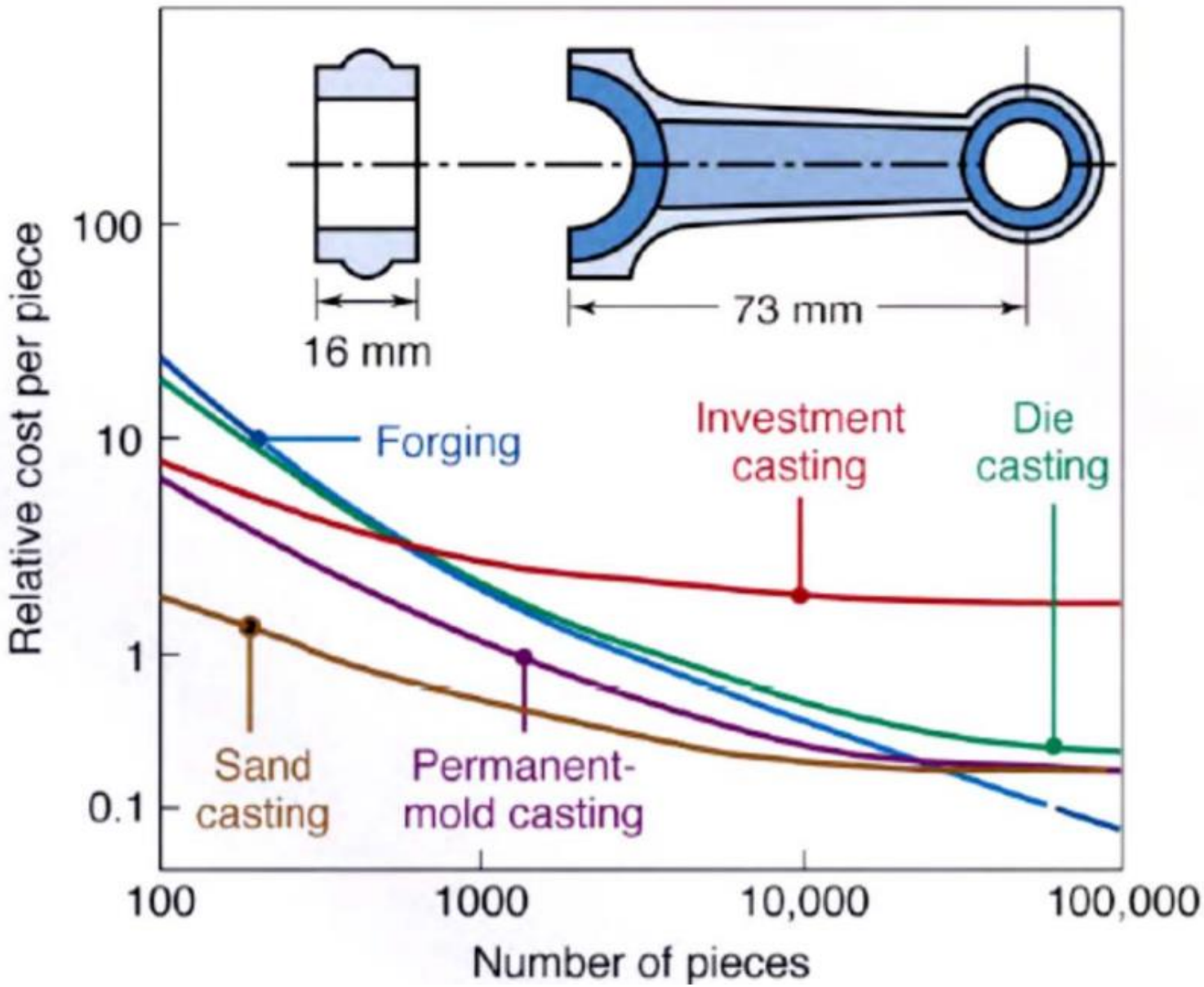

Cost-per-piece in Forging

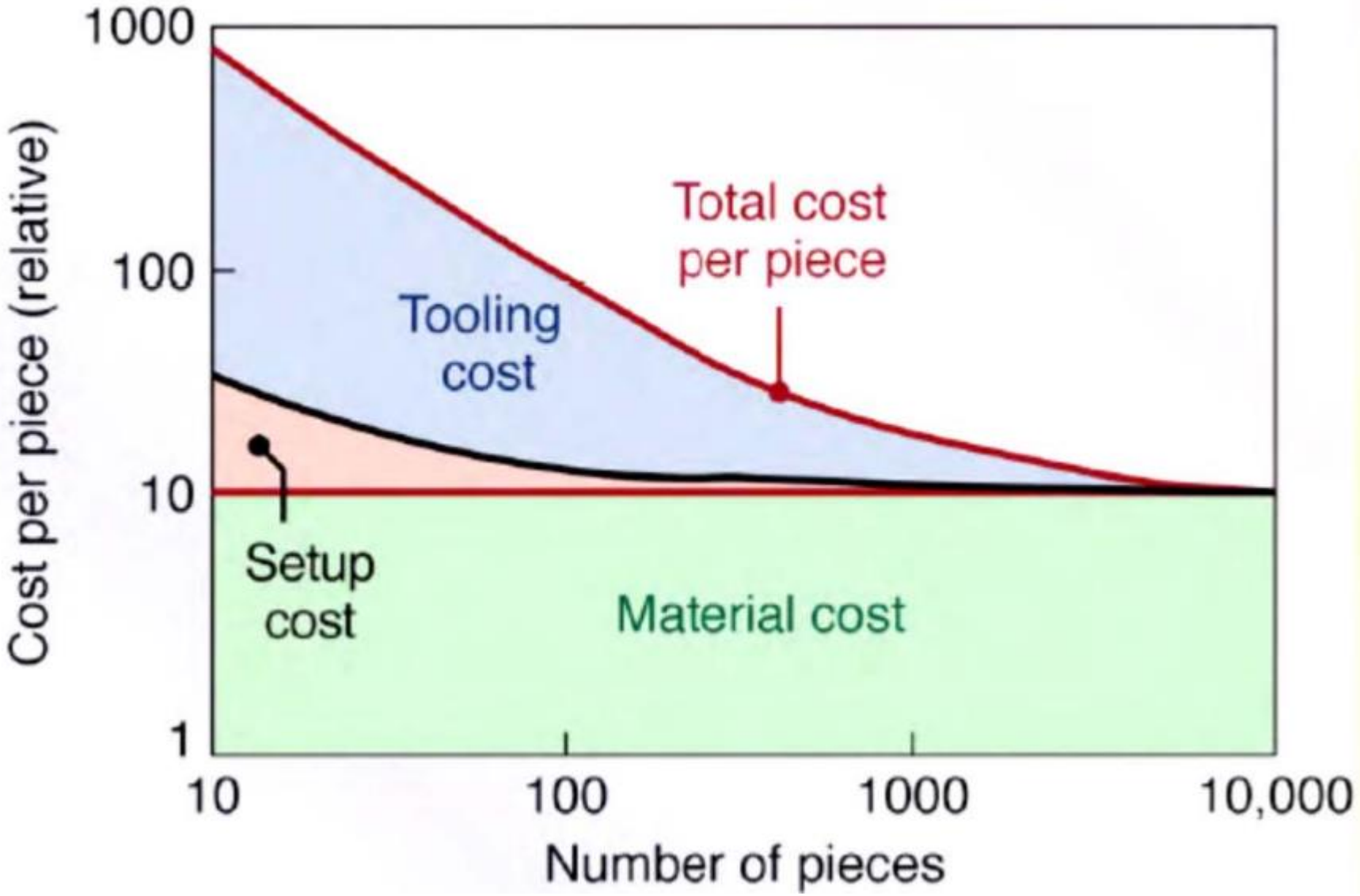

Process Parameters

- Lubrication is critical,
- especially with steels, because of the possibility of sticking (seizure)
- between the workpiece and the tooling (in the case of lubricant breakdown).
- The most effective means of lubrication is the application of a phosphate-conversion coating on the workpiece,
- followed by a coating of soap or wax.

Phosphate coating provides **strong adhesion and corrosion protection**, and also improves the **friction** properties of sliding components. improves rust inhibiting characteristics

3- Impact Extrusion

Often a combination of indirect and cold extrusion

- Thickness of extruded part depends on clearance between punch and die
- Typical product: collapsible toothpaste tubes
- The punch descends rapidly on the blank (slug), which is extruded backwards
- Because of volume constancy, the thickness of the tubular extruded section is a function of the clearance between the punch and the die cavity.

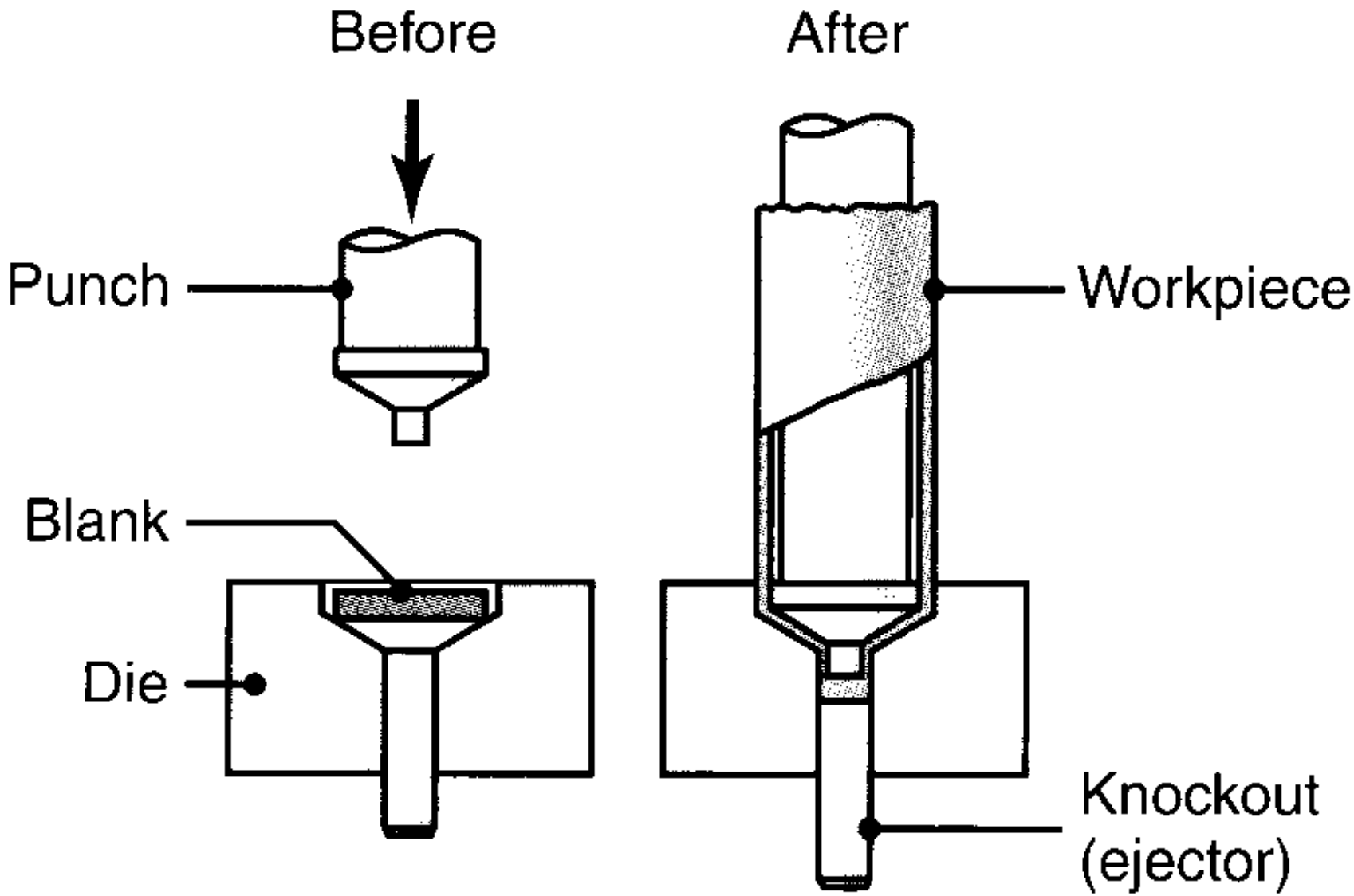
Before
After
Punch
Workpiece
Blank
Die
Knockout
(ejector)

4- Hydrostatic Extrusion

- The pressure required in the chamber is supplied via a piston through an incompressible fluid medium surrounding the billet
- Pressures are typically on the order of 1400 MPa.
- The high pressure in the chamber transmits some of the fluid to the die surfaces,
- Where it significantly **reduces friction**.
- Hydrostatic extrusion usually is carried out at **room temperature**, typically using vegetable oils as the fluid (particularly castor oil, because it is a good lubricant and its viscosity is not influenced significantly by pressure).

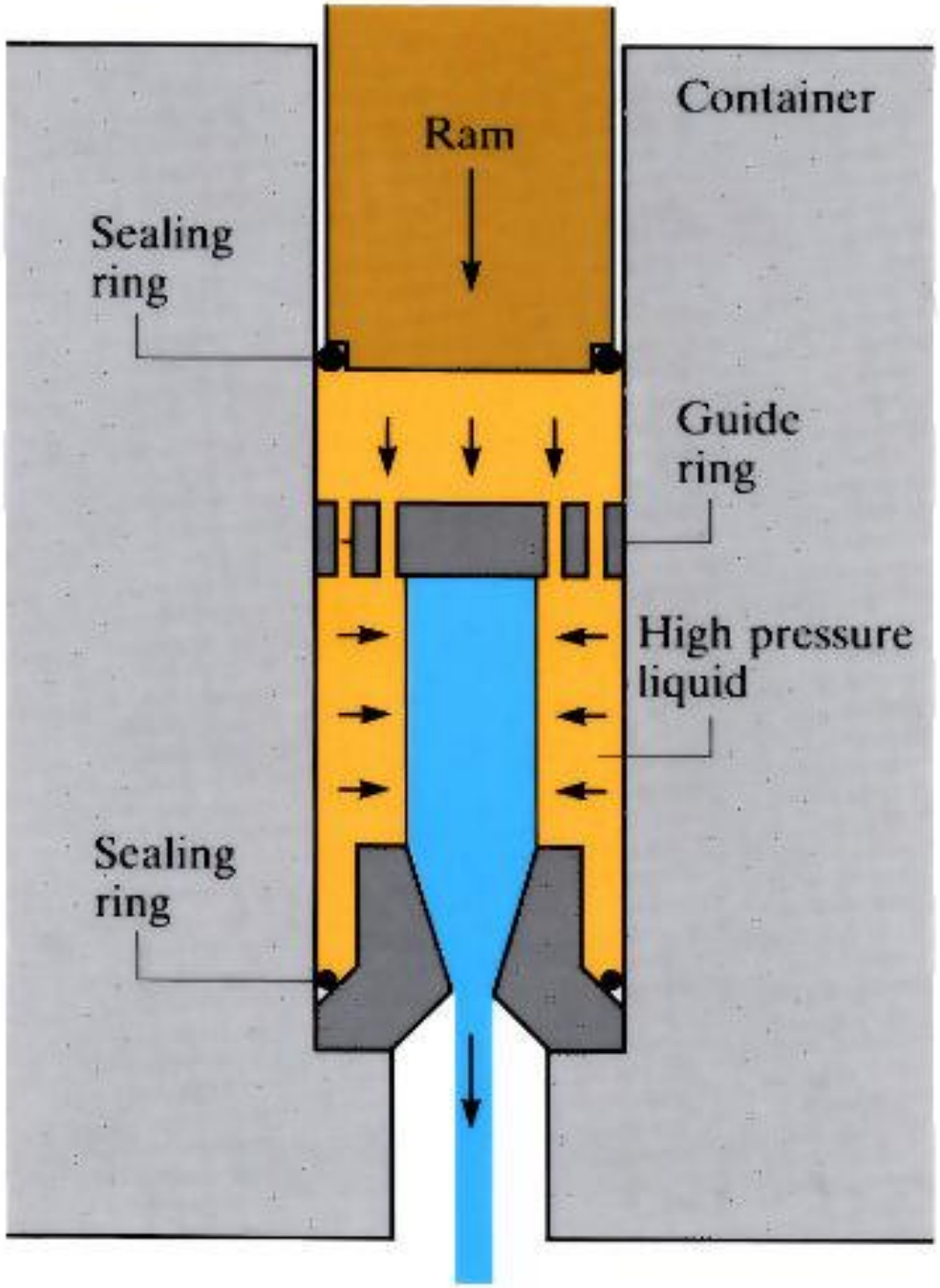

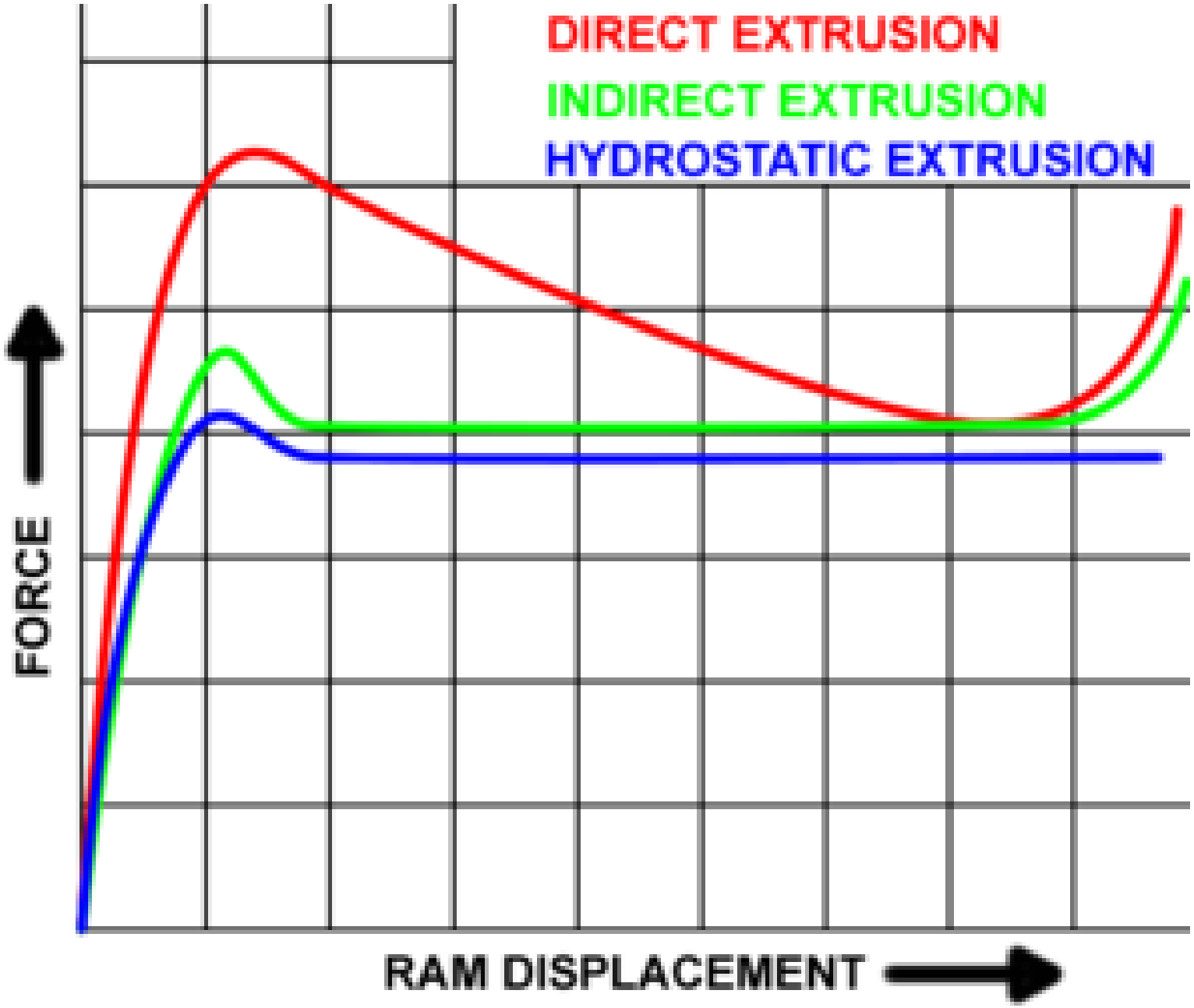

Extrusion pressure is the extrusion force divided by the cross-sectional area of the billet.

Rapid rise in 'P' during initial ram travel is due to the initial compression of the billet to fill the container

For direct extrusion the metal begins to flow through the die at the maximum value of pressure (***breakthrough pressure***)

4- Hydrostatic Extrusion

- Brittle materials can be extruded successfully by this method,
- because the hydrostatic pressure (along with **low friction** and the use of **small die angles** and high extrusion ratios) **increases the ductility** of the material.
- Long wires also have been extruded from an aluminum billet at room temperature and at an extrusion ratio of 14,000,
- which means that a 1-m billet becomes a 14-km-long Wire.

hydrostatic extrusion has had limited industrial applications,

mainly because of the somewhat complex nature of the tooling,

the experience needed with high pressures and the design of specialized equipment, and the long cycle times required-

all of which make the process uneconomical for most materials and applications.

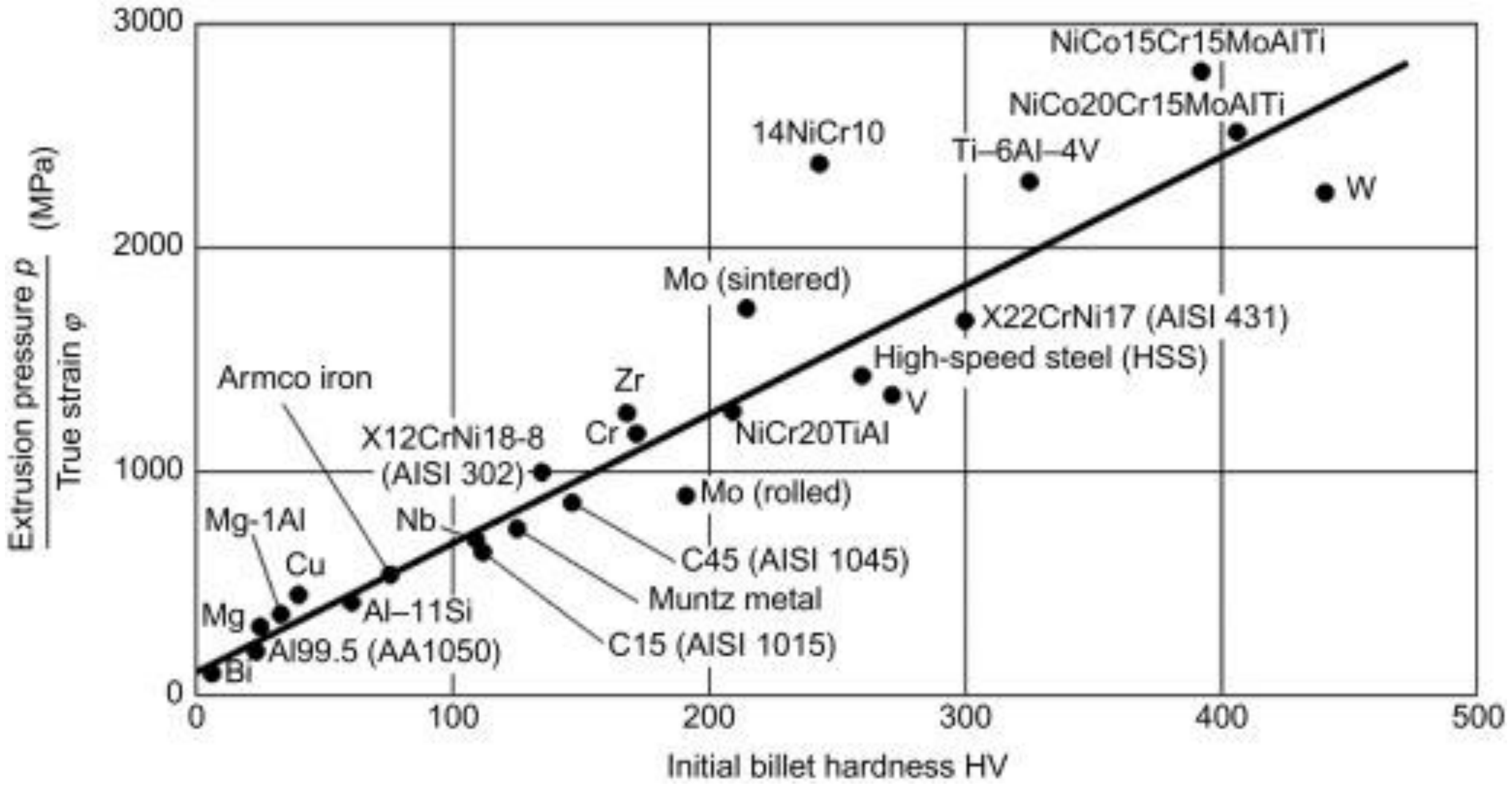
3000
2000
1000
0
0
100
200
300
400
500
Extrusion pressure p / True strain φ (MPa)
Initial billet hardness HV
NiCo15Cr15MoAlTi
NiCo20Cr15MoAlTi
14NiCr10
Ti–6Al–4V
W
Mo (sintered)
X22CrNi17 (AISI 431)
High-speed steel (HSS)
Armco iron
Zr
V
Cr
NiCr20TiAl
X12CrNi18-8
(AISI 302)
Mo (rolled)
Mg-1Al
Nb
C45 (AISI 1045)
Cu
Muntz metal
Mg
Al–11Si
C15 (AISI 1015)
Al99.5 (AA1050)
Bi

Extrusion Defects

Depending on workpiece material condition and process variables, extruded products can develop several types of defects

Some defects are visible to the naked eye,

while others can be detected only by various inspection techniques

three principal extrusion defects:

- surface cracking,
- pipe, and
- internal cracking.

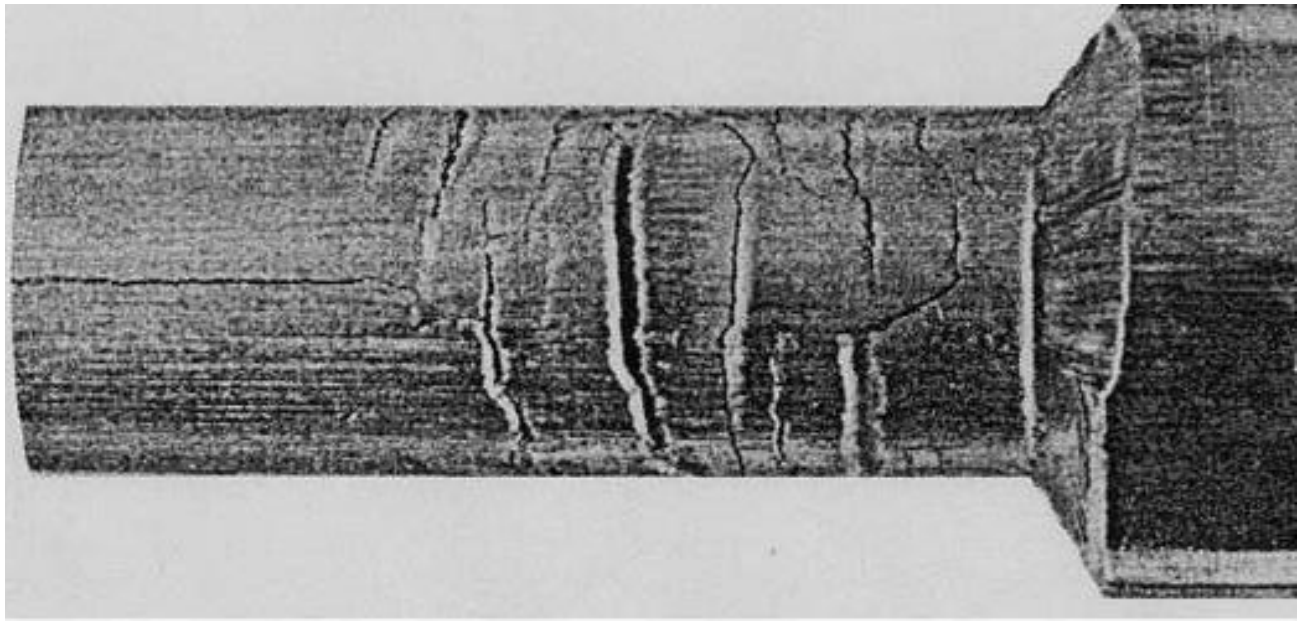

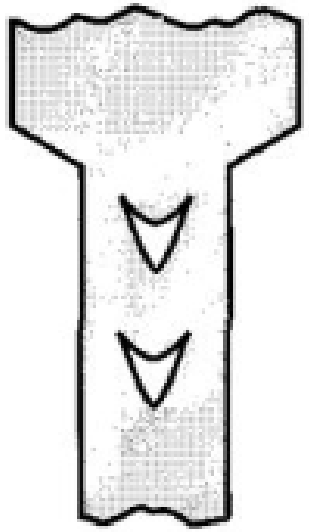

Centre-burst: internal crack due to excessive tensile stress at the centre possibly because of high die angle, low extrusion ratio.

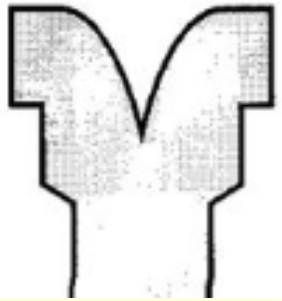

Piping: sink hole at the end of billet under direct extrusion.

Surface cracking: High part temperature due to low extrusion speed and high strain rates.

Surface Cracking

- If extrusion **temperature**, **friction**, or **speed** is too high,
- surface temperatures can rise significantly,
- which may cause surface cracking and tearing (firtree cracking or speed cracking).
- These cracks are **intergranular** (i.e., along the grain boundaries)
- and usually are caused by hot shortness.
- This situation can be avoided by <u>lowering the billet temperature</u> and the <u>extrusion speed</u>.

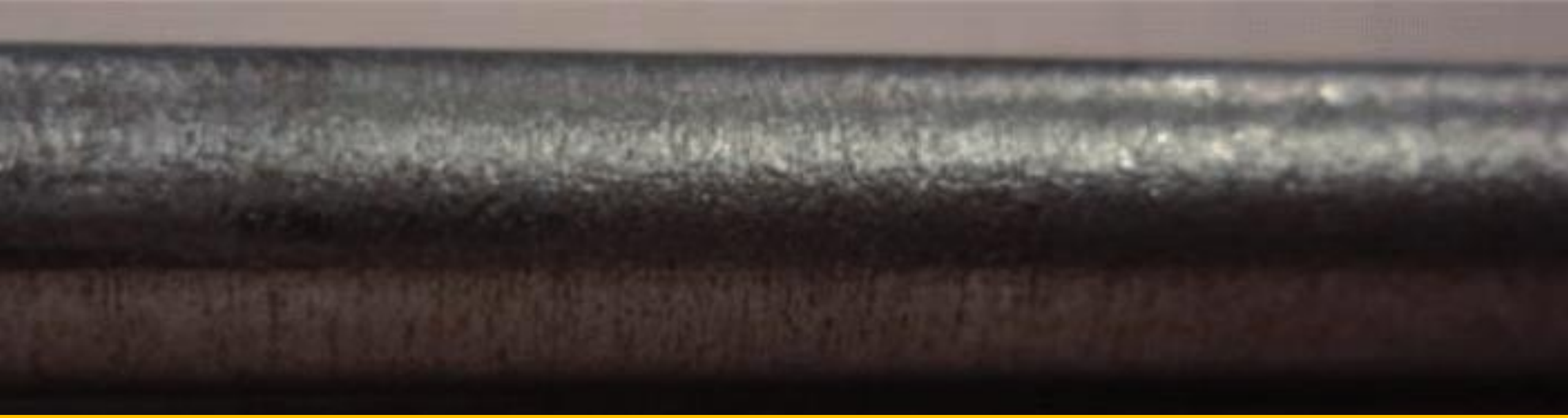

Surface cracking defects ('fir tree') during hydrostatic extrusion

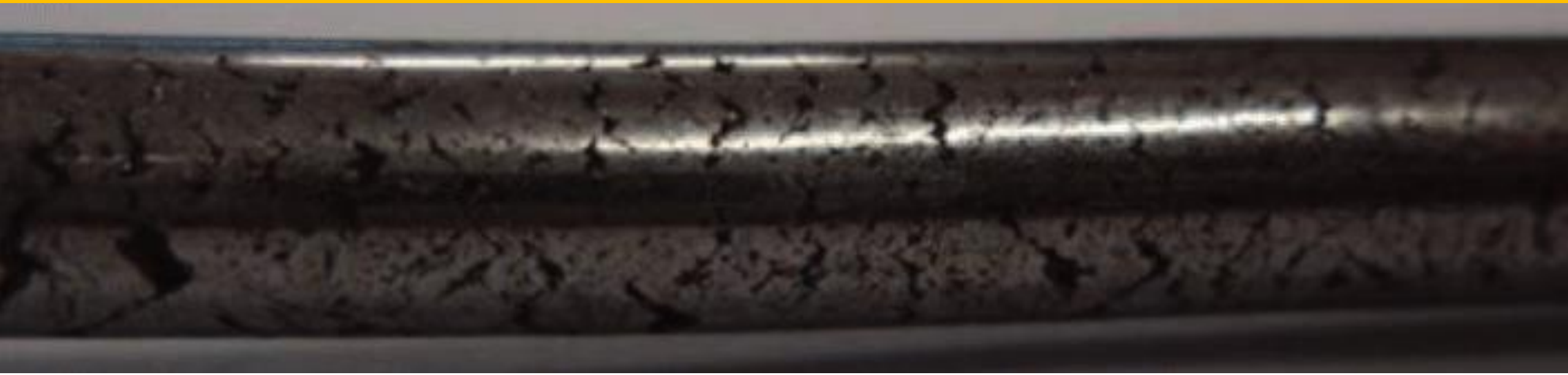

Pipe defect

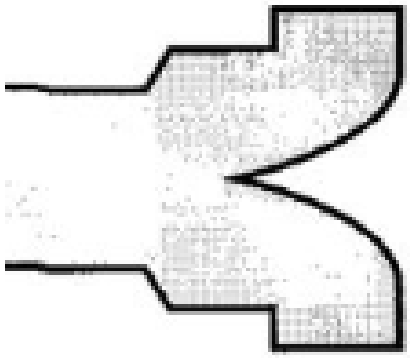

- draw surface oxides and impurities
- toward the center of the billet-much like a funnel.
- known as pipe defect, tailpipe, or fishtailing.
- Piping can be minimized by modifying the flow pattern to be more uniform,
- by controlling friction and minimizing temperature gradients.
- Another method is to machine the billet’s surface prior to extrusion,
- so that scale and surface impurities are removed.

Internal Cracking defect

- The center of the extruded product can develop cracks,
- center cracking, center-burst, arrowhead fracture, or chevron cracking
- cracks are attributed to a state of hydrostatic tensile stress at the centerline in the deformation zone in the die
- a situation similar to the necked region in a tensile-test specimen
- also observed in tube extrusion and in tube spinning;
- they appear on the inside surfaces of tubes.

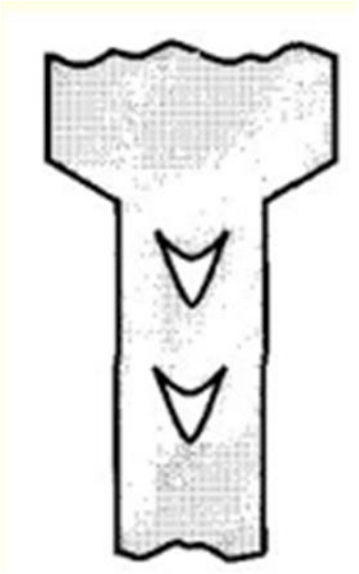

The tendency for center cracking

(a) increases with increasing die angle,

(b) increases with increasing amount of impurities, and

(c) decreases with increasing extrusion ratio and friction.

Drawing Equipment

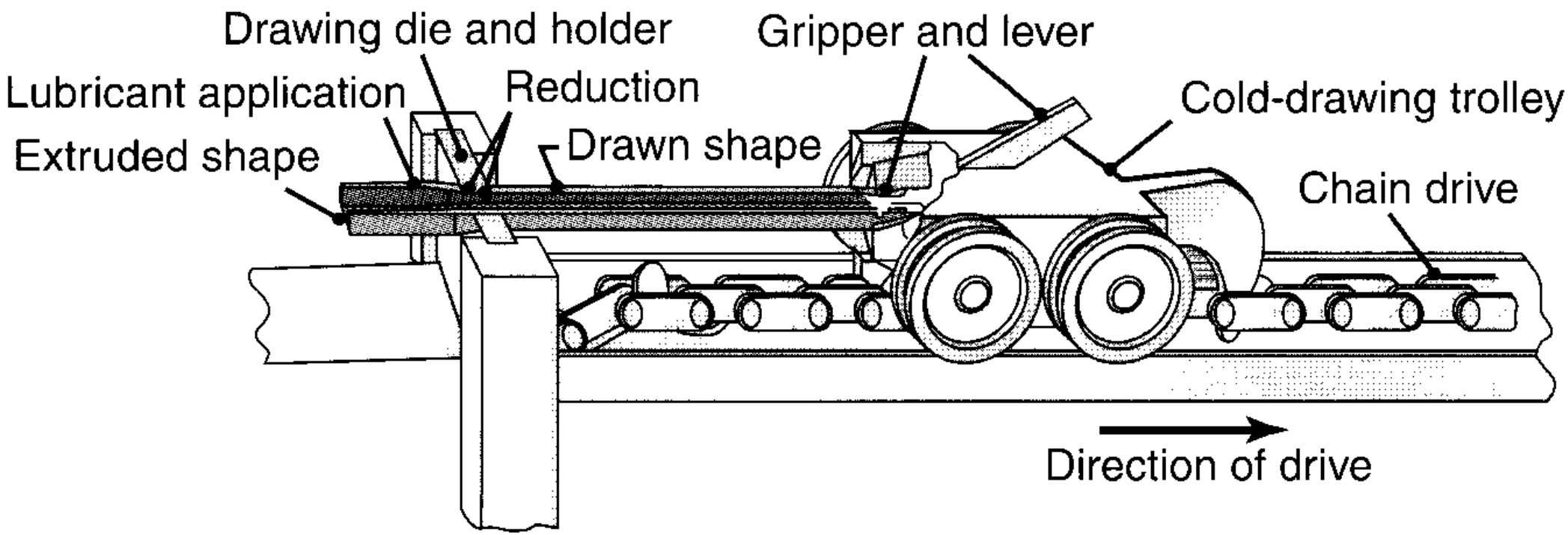

FIGURE 15.23 Cold drawing of an extruded channel on a draw bench to reduce its cross section. Individual lengths of straight rods or of cross sections are drawn by this method.

Sheet-Metal Forming Processes and Equipment